Module - VII

Two- Port Networks

A **pair of terminals** through which a current may enter or leave a network is known as a ***port***.

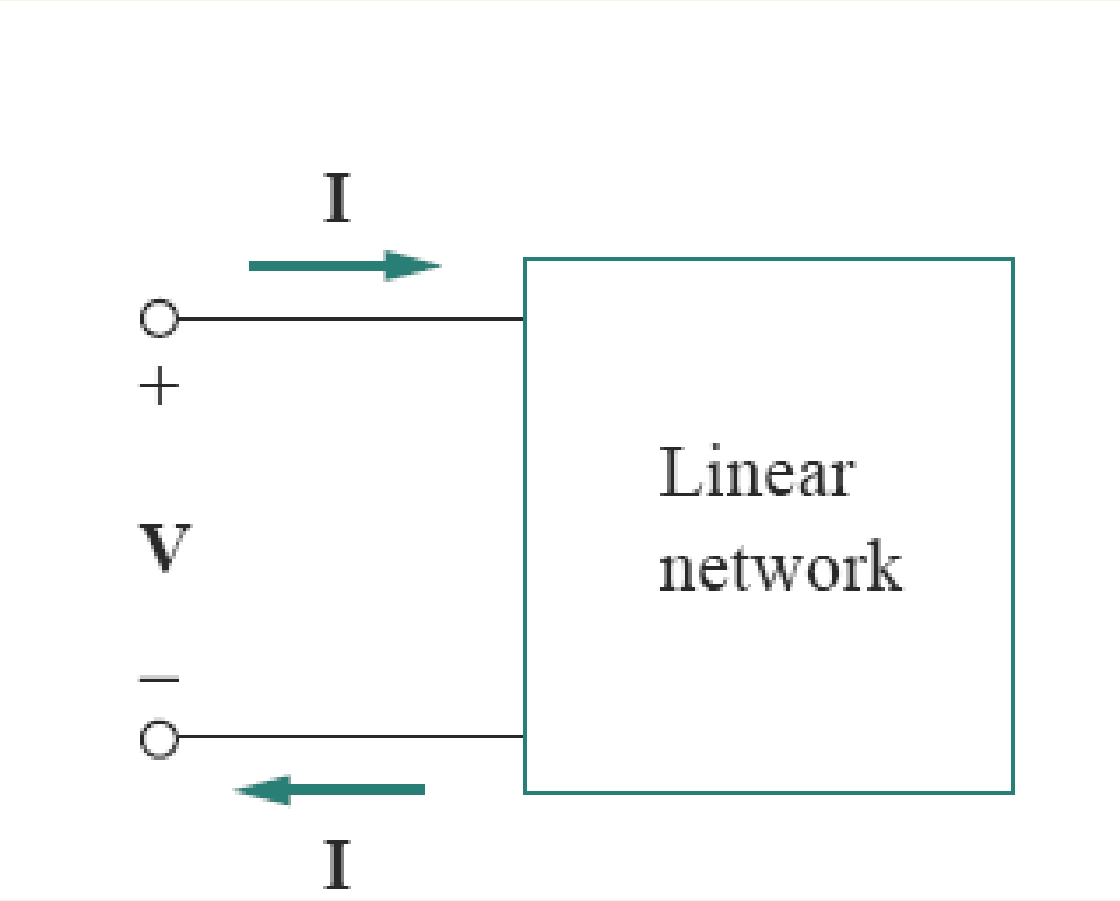

$$V = ZI$$

$$or$$

$$I = YV$$

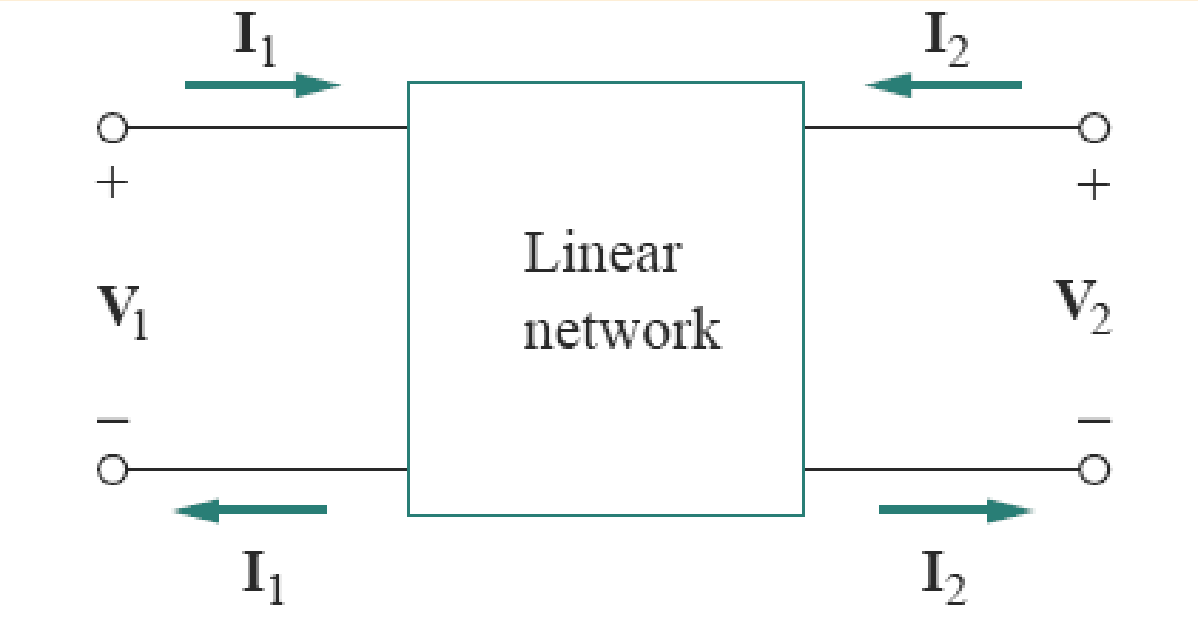

Any linear circuit with four terminals can be regarded as a two-port network provided that it does not contain an independent source and satisfies the port conditions.

i.e the linear circuit containing two ports is assumed to be in zero state and to be free of any independent sources. In other words, there is no initial energy stored in the circuit.

Advantages of Two port network parameters

Two port network parameters **can be experimentally determined** without resorting circuit analysis.

This allows the **response of the network** to **signals applied to the ports** to be calculated easily, **without solving for all the internal voltages and currents in the network**.

Examples of circuits analyzed as two-ports are **filters**, **transmission lines**, **transformers**, and small-signal models for transistors.

It also allows **similar circuits or devices to be compared easily**. For example, transistors are often regarded as two-ports, characterized by their h-parameters.

Two port parameters are used to **design and analyse a large networks**. (dividing large network into small sub-networks of each having two ports)

A two-port network has four port variables: V_1, I_1,V_2, and I_2. If the two-port network is linear, we can use two of the variables as excitation variables and the other two as response variables.

For instance, the network can be excited by a voltage V_1 at port 1 and a voltage V_2 at port 2, and the two currents, I_1 and I_2, can be measured to represent the network response. In this case, $V1$ and V_2 are independent variables and I_1 and I_2 are dependent variables, and the network operation can be described by the two equations

Example of Two port network

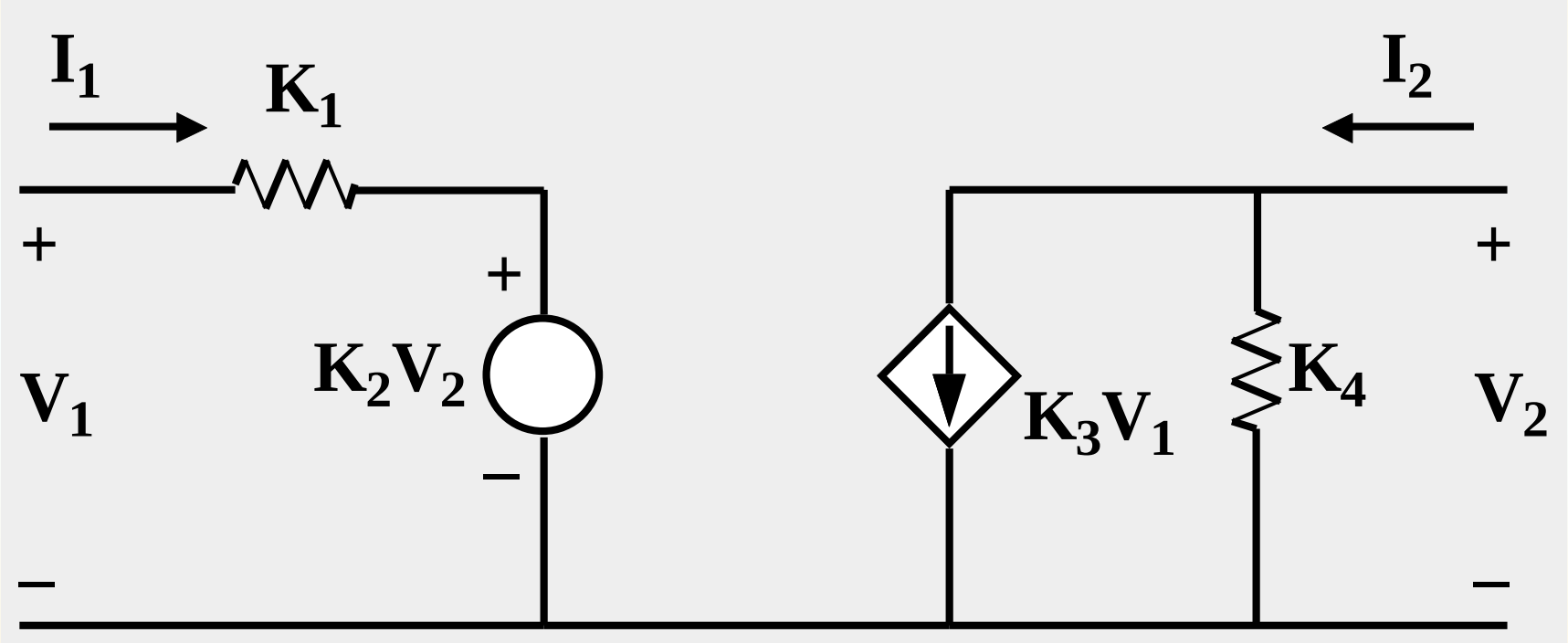

The linear two-port network:

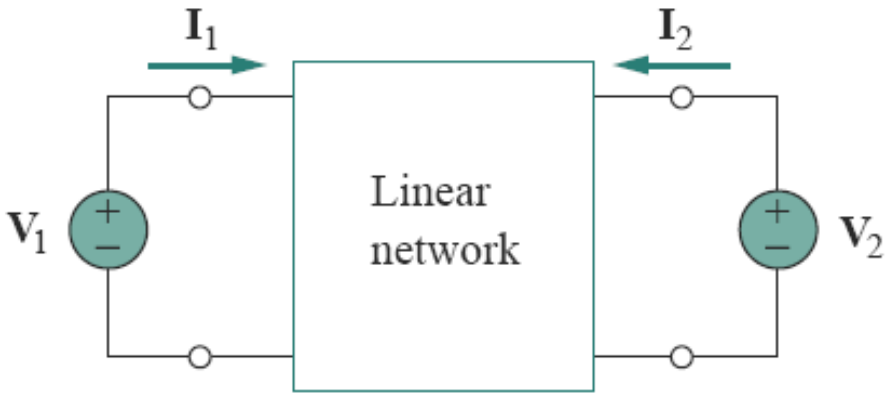

(a) driven by voltage sources,

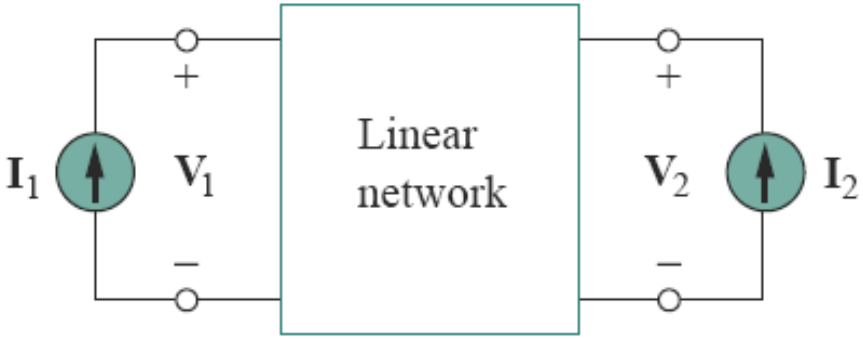

(b) driven by current sources.

IMPEDANCE PARAMETERS

The terminal voltages can be related to the terminal currents as

$$\mathbf{V}_1 = \mathbf{z}_{11}\mathbf{I}_1 + \mathbf{z}_{12}\mathbf{I}_2$$
$$\mathbf{V}_2 = \mathbf{z}_{21}\mathbf{I}_1 + \mathbf{z}_{22}\mathbf{I}_2$$

or in matrix form as

$$\begin{bmatrix} \mathbf{V}_1 \\ \mathbf{V}_2 \end{bmatrix} = \begin{bmatrix} \mathbf{z}_{11} & \mathbf{z}_{12} \\ \mathbf{z}_{21} & \mathbf{z}_{22} \end{bmatrix} \begin{bmatrix} \mathbf{I}_1 \\ \mathbf{I}_2 \end{bmatrix} = [\mathbf{z}] \begin{bmatrix} \mathbf{I}_1 \\ \mathbf{I}_2 \end{bmatrix}$$

where the **z** terms are called the *impedance parameters*, or simply *z parameters*, and have units of ohms.

The values of the parameters can be evaluated by setting $\mathbf{I}_1 = 0$ (input port open-circuited) or $\mathbf{I}_2 = 0$ (output port open-circuited). Thus,

$$\mathbf{z}_{11} = \left.\frac{\mathbf{V}_1}{\mathbf{I}_1}\right|_{\mathbf{I}_2=0}, \qquad \mathbf{z}_{12} = \left.\frac{\mathbf{V}_1}{\mathbf{I}_2}\right|_{\mathbf{I}_1=0}$$

$$\mathbf{z}_{21} = \left.\frac{\mathbf{V}_2}{\mathbf{I}_1}\right|_{\mathbf{I}_2=0}, \qquad \mathbf{z}_{22} = \left.\frac{\mathbf{V}_2}{\mathbf{I}_2}\right|_{\mathbf{I}_1=0}$$

Since the *z* parameters are obtained by open-circuiting the input or output port, they are also called the *open-circuit impedance parameters*.

Specifically,

z11 = Open-circuit input impedance

z12 = Open-circuit transfer impedance from port 1 to port 2

z21 = Open-circuit transfer impedance from port 2 to port 1

z22 = Open-circuit output impedance

z11 and **z**21 can be obtained by connecting a voltage **V**1 (or a current source **I**1) to port 1 with port 2 open-circuited and finding **I**1 and **V**2;

z12 and **z**22 can be obtained by connecting a voltage **V**2 (or a current source **I**2) to port 2 with port 1 open-circuited and finding **I**2 and **V**1;

z11 and **z**22 are called *driving-point impedances*, while
z21 and **z**12 are called *transfer impedances*.

When z11 = z22, the two-port network is said to be *symmetrical*.

When the two-port network is linear and has no dependent sources, the transfer impedances are equal **(z12 = z21), and the two-port is said to be *reciprocal*.** This means that if the points of excitation and response are interchanged, the transfer impedances remain the same.

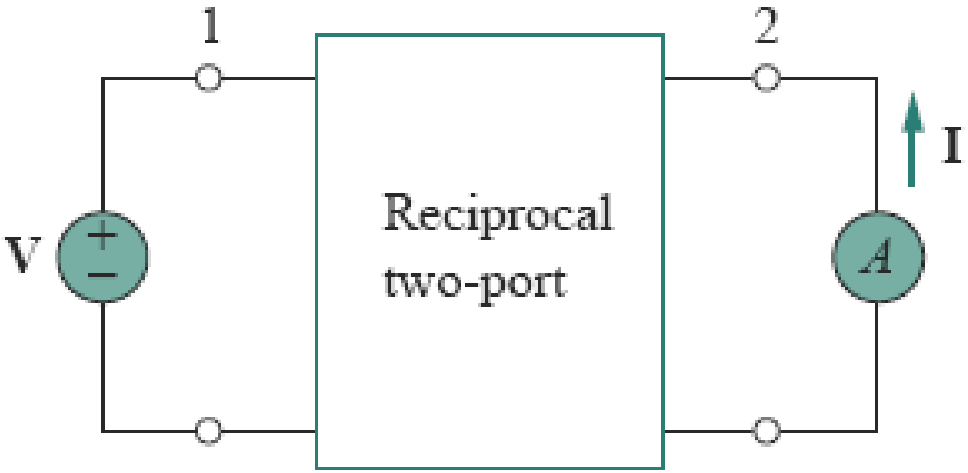

(a)

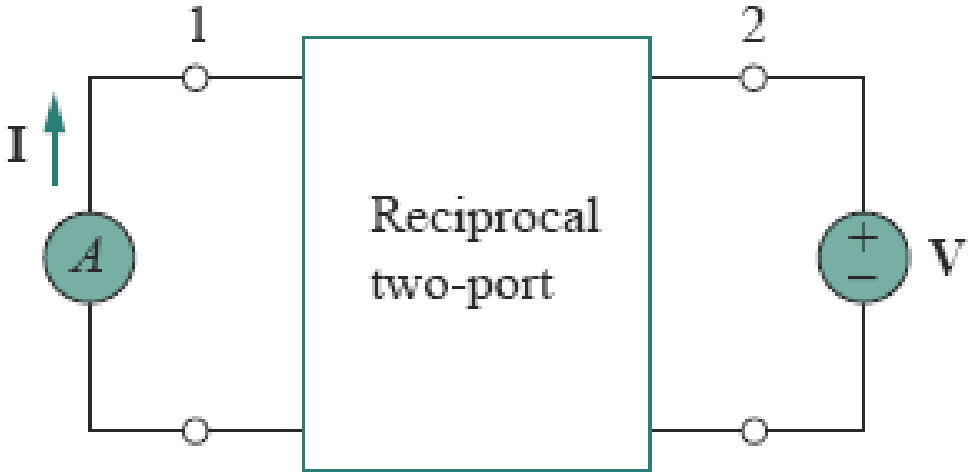

(b)

P.1: Determine the *z* parameters for the circuit in Fig.

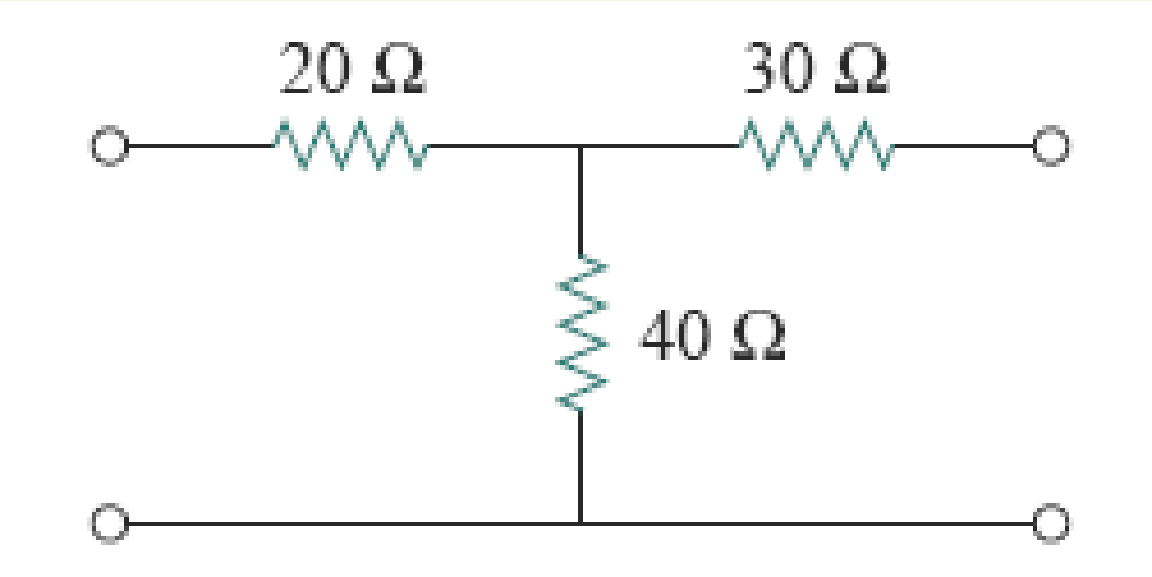

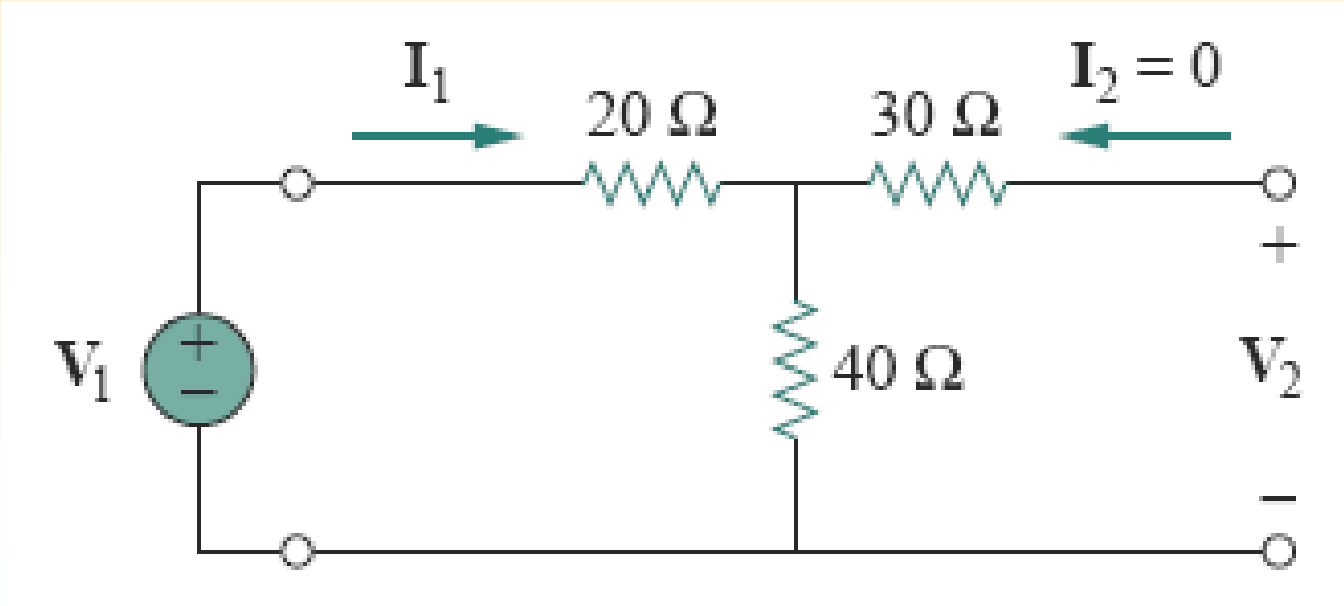

$$z_{11} = \frac{V_1}{I_1} = \frac{(20 + 40)I_1}{I_1} = 60\ \Omega$$

$$z_{21} = \frac{V_2}{I_1} = \frac{40I_1}{I_1} = 40\ \Omega$$

$$\mathbf{z}_{12} = \frac{\mathbf{V}_1}{\mathbf{I}_2} = \frac{40\mathbf{I}_2}{\mathbf{I}_2} = 40\ \Omega, \qquad \mathbf{z}_{22} = \frac{\mathbf{V}_2}{\mathbf{I}_2} = \frac{(30+40)\mathbf{I}_2}{\mathbf{I}_2} = 70\ \Omega$$

ADMITTANCE PARAMETERS

$$\mathbf{I}_1 = \mathbf{y}_{11}\mathbf{V}_1 + \mathbf{y}_{12}\mathbf{V}_2$$
$$\mathbf{I}_2 = \mathbf{y}_{21}\mathbf{V}_1 + \mathbf{y}_{22}\mathbf{V}_2$$

or in matrix form as

$$\begin{bmatrix} \mathbf{I}_1 \\ \mathbf{I}_2 \end{bmatrix} = \begin{bmatrix} \mathbf{y}_{11} & \mathbf{y}_{12} \\ \mathbf{y}_{21} & \mathbf{y}_{22} \end{bmatrix} \begin{bmatrix} \mathbf{V}_1 \\ \mathbf{V}_2 \end{bmatrix} = [\mathbf{y}] \begin{bmatrix} \mathbf{V}_1 \\ \mathbf{V}_2 \end{bmatrix}$$

$$\mathbf{y}_{11} = \left.\frac{\mathbf{I}_1}{\mathbf{V}_1}\right|_{\mathbf{V}_2=0}, \qquad \mathbf{y}_{12} = \left.\frac{\mathbf{I}_1}{\mathbf{V}_2}\right|_{\mathbf{V}_1=0}$$

$$\mathbf{y}_{21} = \left.\frac{\mathbf{I}_2}{\mathbf{V}_1}\right|_{\mathbf{V}_2=0}, \qquad \mathbf{y}_{22} = \left.\frac{\mathbf{I}_2}{\mathbf{V}_2}\right|_{\mathbf{V}_1=0}$$

y11 = Short-circuit input admittance

y12 = Short-circuit transfer admittance from port 2 to port 1

y21 = Short-circuit transfer admittance from port 1 to port 2

y22 = Short-circuit output admittance

When y11 = y22, the two-port network is said to be *symmetrical*.

For reciprocal network, y12 = y21.

P.2: Determine the *y* parameters for the circuit in Fig.

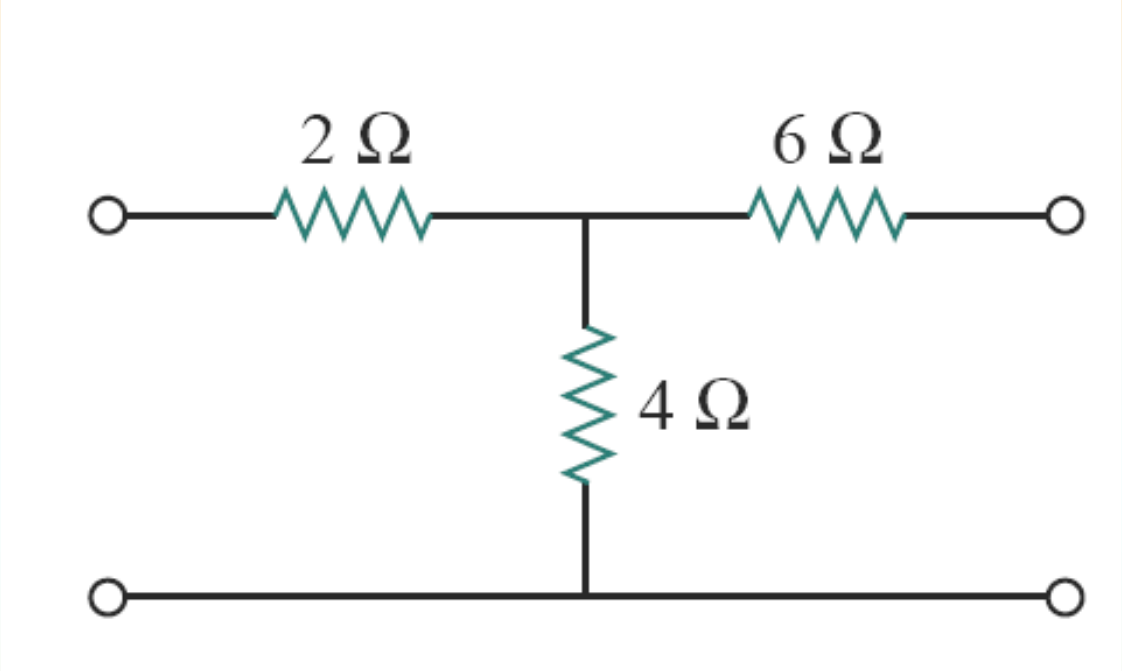

y11 = 0.2273 S, **y**12 = **y**21 = −0.0909 S, **y**22 = 0.1364 S.

P.3: Determine the z and *y* parameters for the circuit in Fig.

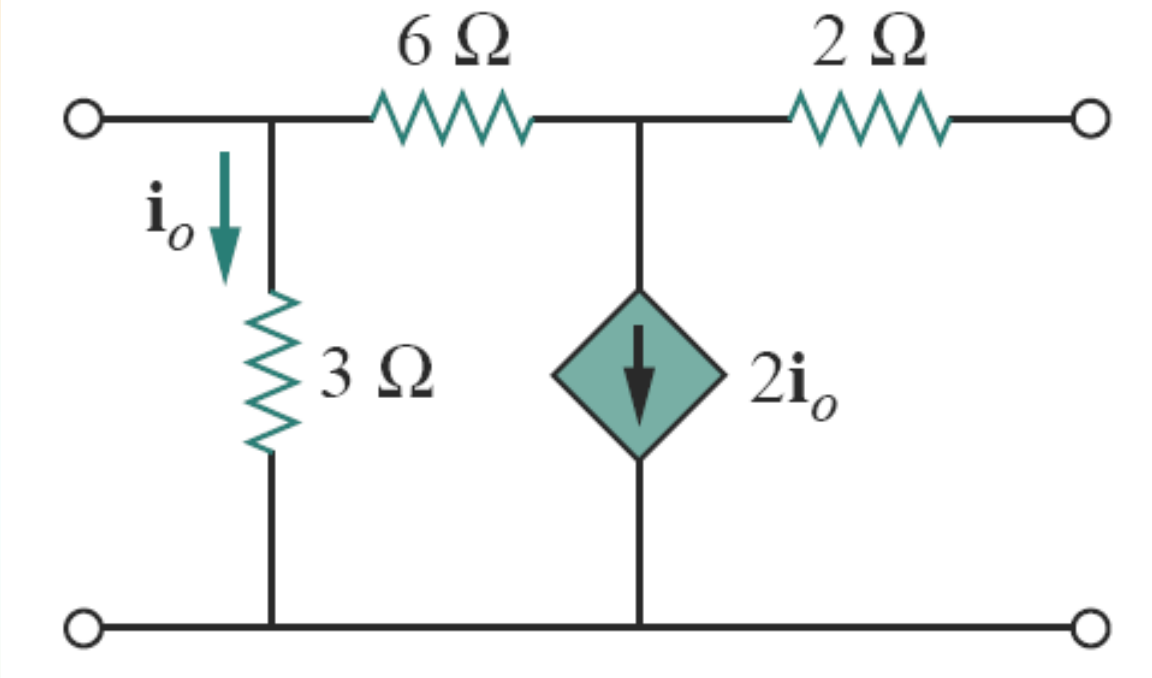

y11 = 0.625 S, **y**12 = −0.125 S, **y**21 = 0.375 S, **y**22 = 0.125 S.

Z11 = 1 Ω, **Z**12 = 1 Ω, **Z**21 = -3 Ω, **Z**22 = 5 Ω.

P.4: Obtain the admittance parameter equivalent circuit of the two-port in Fig.

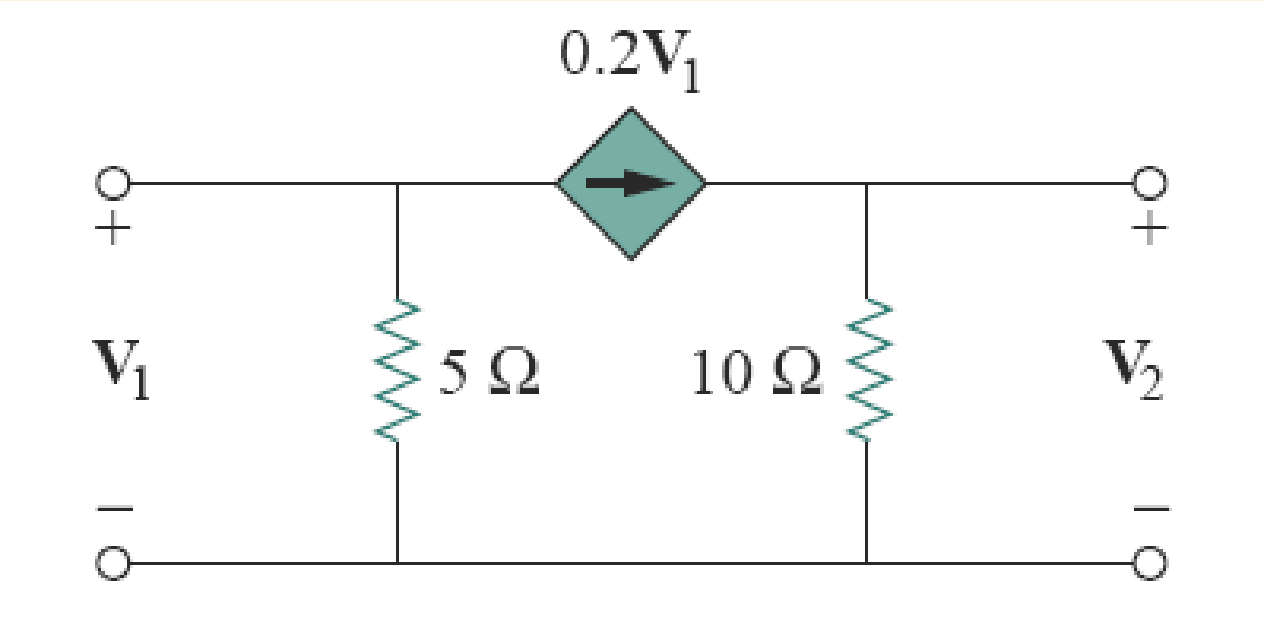

y11 = 0.4 S, **y**12 = 0 S, **y**21 = -0.2 S, **y**22 = 0.1 S.

h11 = 2.5, **h**12 = 0, **h**21 = , **h**22 =

P.5: Find the impedance-parameter equivalent of the circuit in Fig.

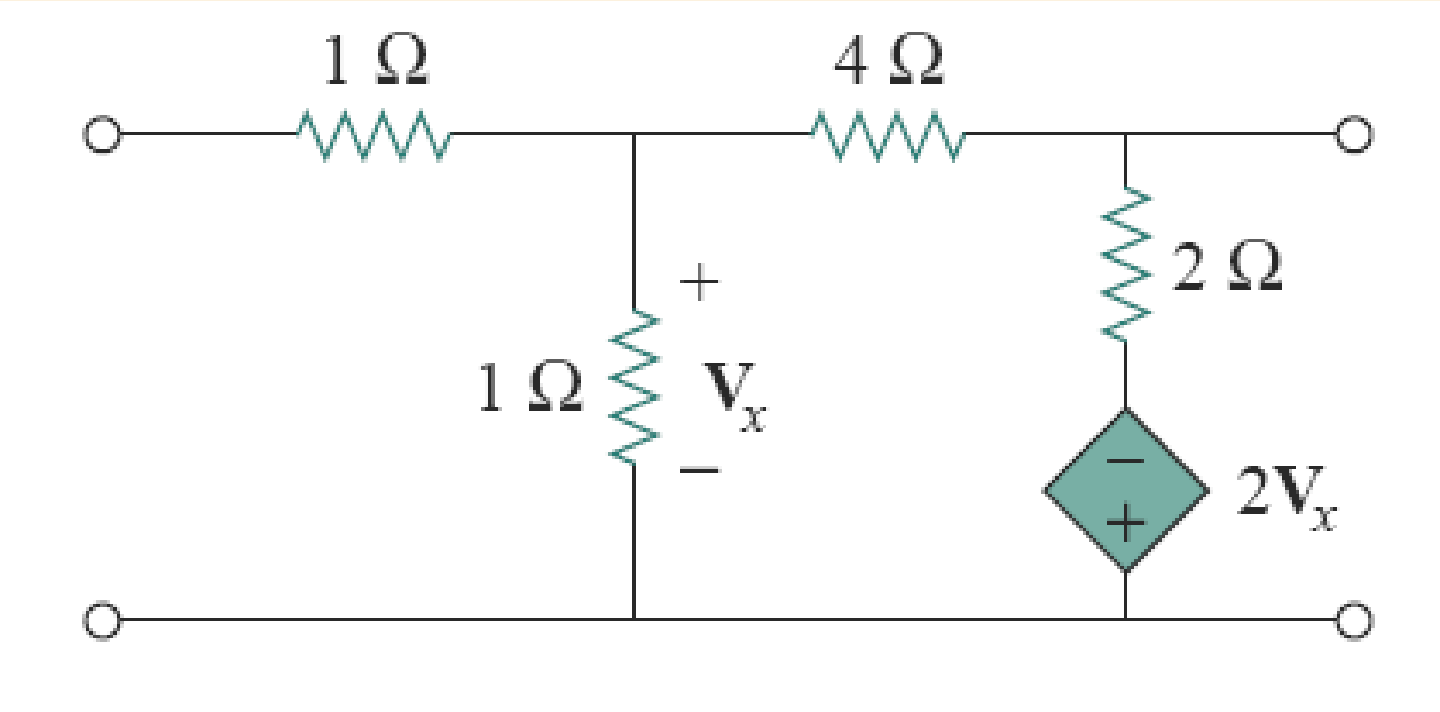

$Z11 = 1.6667\ \Omega$, $Z12 = 0.2222\ \Omega$, $Z21 = -0.6667\ \Omega$, $Z22 = 1.111\ \Omega$

P.6: Obtain the *y* parameters for the network shown in Fig.

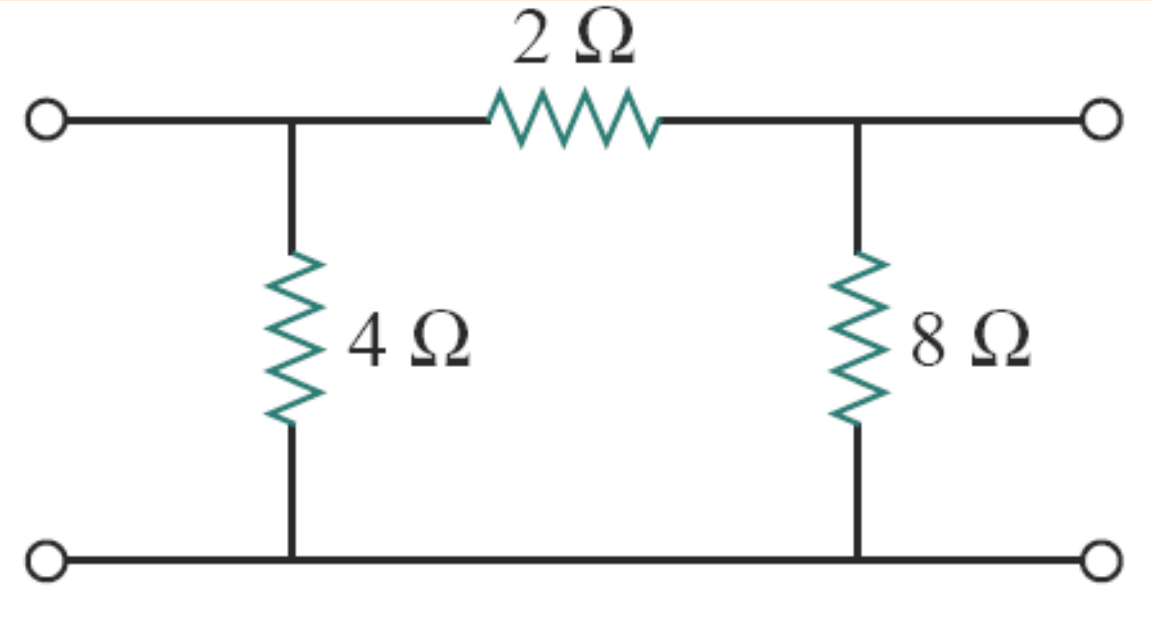

$\mathbf{y}11 = 0.75$ S, $\mathbf{y}21 = -0.5$ S, $\mathbf{y}12 = -0.5$ S, $\mathbf{y}22 = 0.625$ S

P.7: Obtain the *y* parameters for the network shown in Fig.

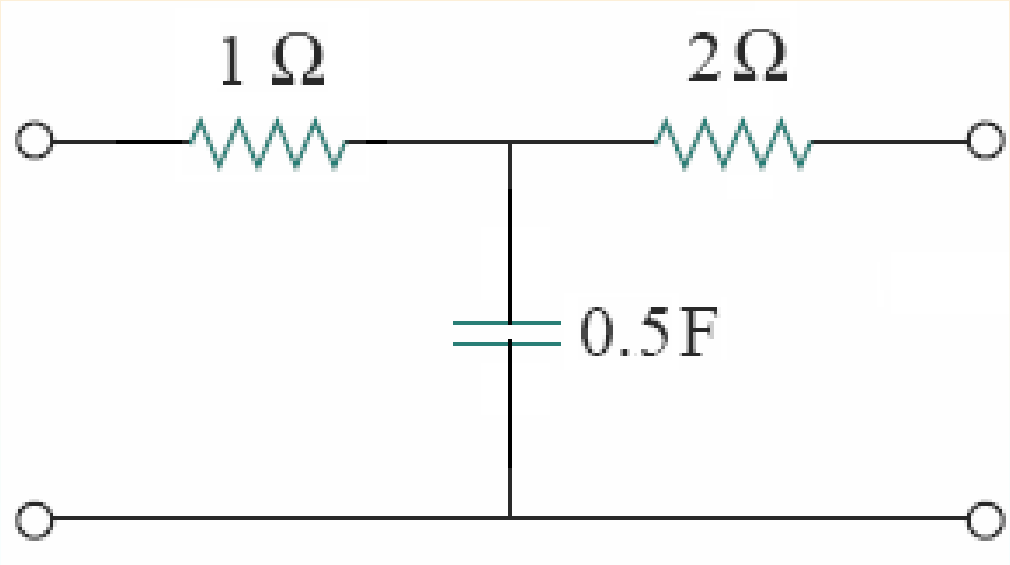

HYBRID PARAMETERS

It is much easier to measure experimentally the *h* parameters of transistors than to measure their *z* or *y* parameters. Hence these parameters are used in circuits which have electronic devices.

$$\boxed{\begin{aligned} \mathbf{V}_1 &= \mathbf{h}_{11}\mathbf{I}_1 + \mathbf{h}_{12}\mathbf{V}_2 \\ \mathbf{I}_2 &= \mathbf{h}_{21}\mathbf{I}_1 + \mathbf{h}_{22}\mathbf{V}_2 \end{aligned}}$$

or in matrix form,

$$\begin{bmatrix} \mathbf{V}_1 \\ \mathbf{I}_2 \end{bmatrix} = \begin{bmatrix} \mathbf{h}_{11} & \mathbf{h}_{12} \\ \mathbf{h}_{21} & \mathbf{h}_{22} \end{bmatrix} \begin{bmatrix} \mathbf{I}_1 \\ \mathbf{V}_2 \end{bmatrix} = [\mathbf{h}] \begin{bmatrix} \mathbf{I}_1 \\ \mathbf{V}_2 \end{bmatrix}$$

$$\boxed{\begin{aligned} \mathbf{h}_{11} &= \left.\frac{\mathbf{V}_1}{\mathbf{I}_1}\right|_{\mathbf{V}_2=0}, \qquad & \mathbf{h}_{12} &= \left.\frac{\mathbf{V}_1}{\mathbf{V}_2}\right|_{\mathbf{I}_1=0} \\ \mathbf{h}_{21} &= \left.\frac{\mathbf{I}_2}{\mathbf{I}_1}\right|_{\mathbf{V}_2=0}, \qquad & \mathbf{h}_{22} &= \left.\frac{\mathbf{I}_2}{\mathbf{V}_2}\right|_{\mathbf{I}_1=0} \end{aligned}}$$

h11 = Short-circuit input impedance

h12 = Open-circuit reverse voltage gain

h21 = Short-circuit forward current gain

h22 = Open-circuit output admittance

When $\Delta h = 1$, the two-port network is said to be *symmetrical*.

For reciprocal networks, h12 = −h21.

P.8: Determine the *h* parameters for the circuit in Fig.

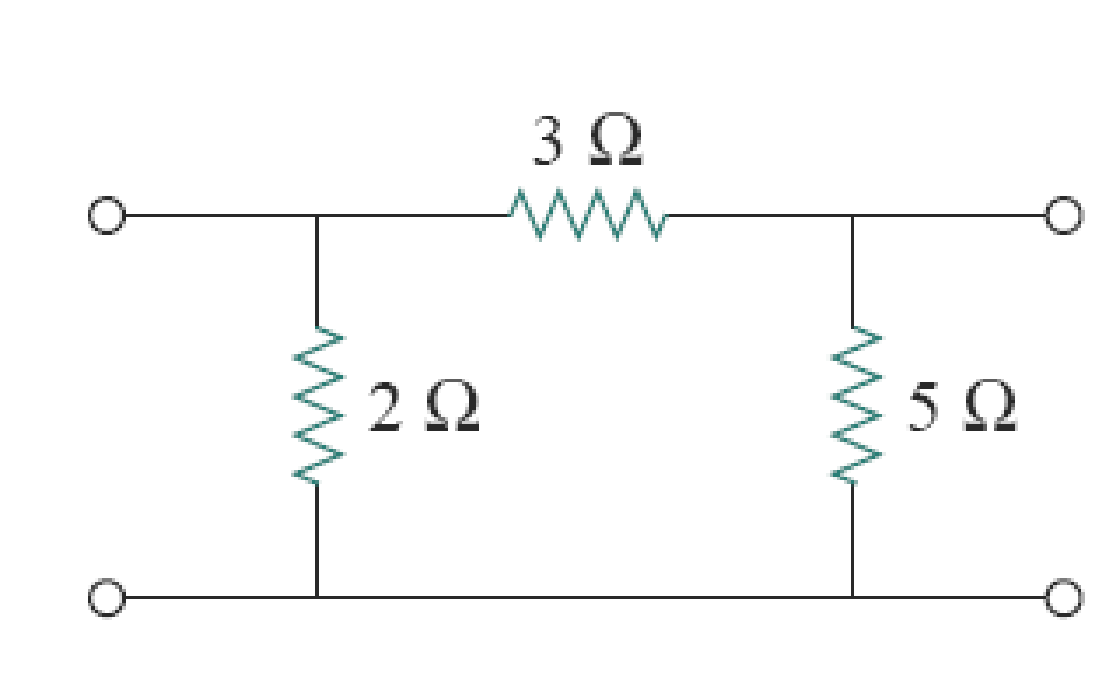

h11 = 1.2 , **h**12 = 0.4, **h**21 = −0.4, **h**22 = 0.4 S.

TRANSMISSION PARAMETERS

General inward current convention

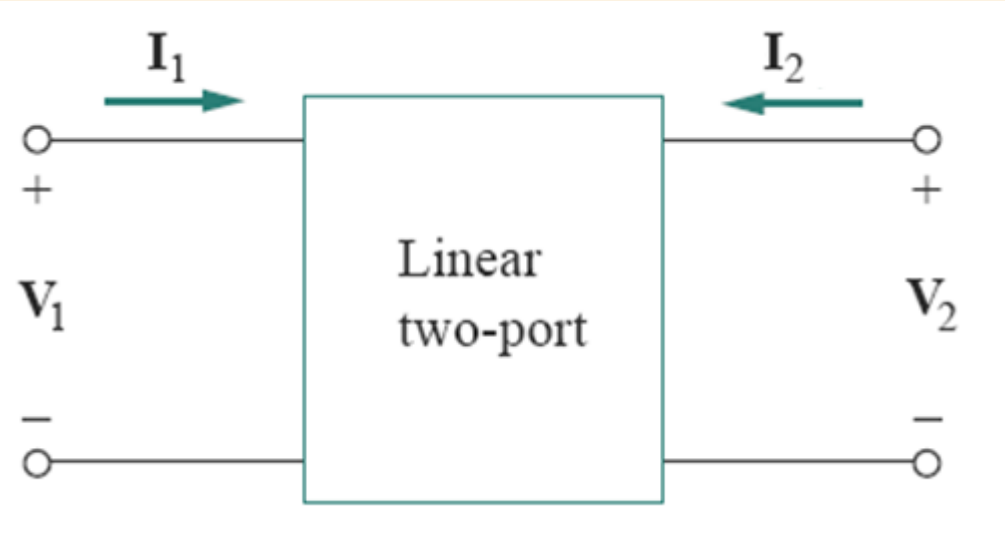

$$V_1 = AV_2 + BI_2$$
$$I_1 = CV_2 + DI_2$$

However, in transmission system the current flows in outward direction.

Hence for outward direction (i.e for transmission system convention), **either** reverse the direction of I_2 in the circuit **or** reverse the sign of B and D.

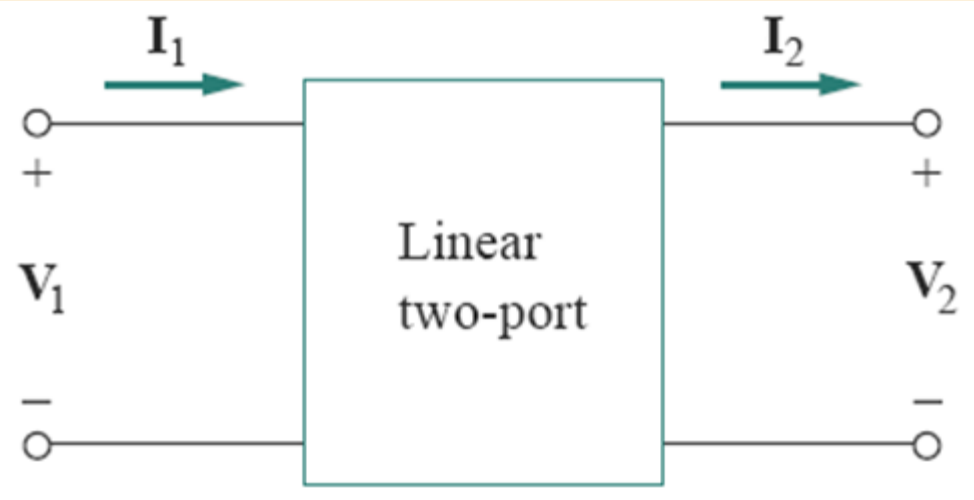

$$V_1 = AV_2 + BI_2$$
$$I_1 = CV_2 + DI_2$$

or

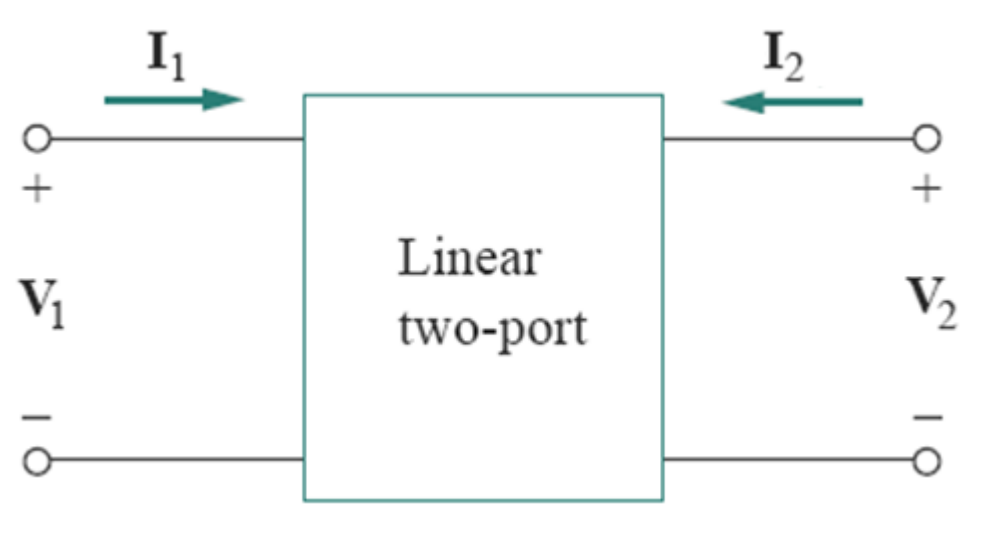

$$V_1 = AV_2 - BI_2$$
$$I_1 = CV_2 - DI_2$$

for second circuit

$$\mathbf{A} = \left.\frac{\mathbf{V}_1}{\mathbf{V}_2}\right|_{\mathbf{I}_2=0}, \qquad \mathbf{B} = -\left.\frac{\mathbf{V}_1}{\mathbf{I}_2}\right|_{\mathbf{V}_2=0}$$

$$\mathbf{C} = \left.\frac{\mathbf{I}_1}{\mathbf{V}_2}\right|_{\mathbf{I}_2=0}, \qquad \mathbf{D} = -\left.\frac{\mathbf{I}_1}{\mathbf{I}_2}\right|_{\mathbf{V}_2=0}$$

Thus, the transmission parameters are called, specifically,

A = Open-circuit voltage ratio

B = Negative short-circuit transfer impedance

C = Open-circuit transfer admittance

D = Negative short-circuit current ratio

When A = D, the two-port network is said to be *symmetrical*.

For reciprocal networks, AD − BC = 1

P.9: Find the transmission parameters for the circuit in Fig.

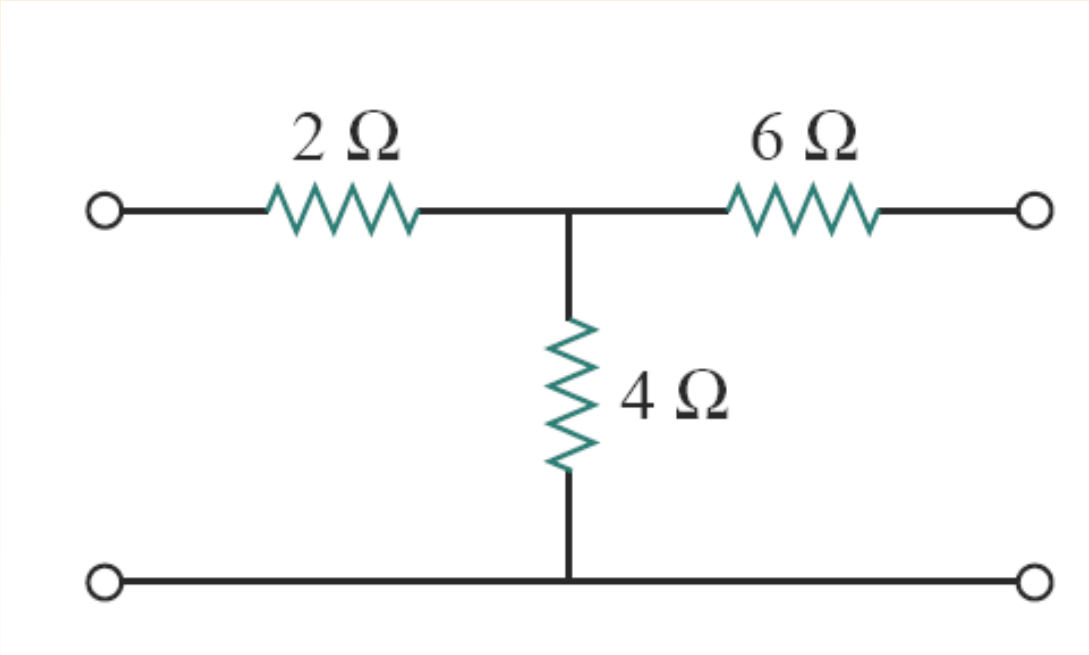

A = 1.5, **B** = 11 Ω, **C** = 0.25 S, **D** = 2.5.

P.10: Find the transmission parameters for the circuit in Fig.

INTERRELATION BETWEEN PARAMETERS

Conversion of two-port parameters.

	z		y		h		T	
z			$\frac{y_{22}}{\Delta_y}$	$-\frac{y_{12}}{\Delta_y}$	$\frac{\Delta_h}{h_{22}}$	$\frac{h_{12}}{h_{22}}$	$\frac{A}{C}$	$\frac{\Delta_T}{C}$
			$-\frac{y_{21}}{\Delta_y}$	$\frac{y_{11}}{\Delta_y}$	$-\frac{h_{21}}{h_{22}}$	$\frac{1}{h_{22}}$	$\frac{1}{C}$	$\frac{D}{C}$
y	$\frac{z_{22}}{\Delta_z}$	$-\frac{z_{12}}{\Delta_z}$			$\frac{1}{h_{11}}$	$-\frac{h_{12}}{h_{11}}$	$\frac{D}{B}$	$-\frac{\Delta_T}{B}$
	$-\frac{z_{21}}{\Delta_z}$	$\frac{z_{11}}{\Delta_z}$			$\frac{h_{21}}{h_{11}}$	$\frac{\Delta_h}{h_{11}}$	$-\frac{1}{B}$	$\frac{A}{B}$
h	$\frac{\Delta_z}{z_{22}}$	$\frac{z_{12}}{z_{22}}$	$\frac{1}{y_{11}}$	$-\frac{y_{12}}{y_{11}}$			$\frac{B}{D}$	$\frac{\Delta_T}{D}$
	$-\frac{z_{21}}{z_{22}}$	$\frac{1}{z_{22}}$	$\frac{y_{21}}{y_{11}}$	$\frac{\Delta_y}{y_{11}}$			$-\frac{1}{D}$	$\frac{C}{D}$
T	$\frac{z_{11}}{z_{21}}$	$\frac{\Delta_z}{z_{21}}$	$-\frac{y_{22}}{y_{21}}$	$-\frac{1}{y_{21}}$	$-\frac{\Delta_h}{h_{21}}$	$-\frac{h_{11}}{h_{21}}$		
	$\frac{1}{z_{21}}$	$\frac{z_{22}}{z_{21}}$	$-\frac{\Delta_y}{y_{21}}$	$-\frac{y_{11}}{y_{21}}$	$-\frac{h_{22}}{h_{21}}$	$-\frac{1}{h_{21}}$		

$\Delta_z = z_{11}z_{22} - z_{12}z_{21}$, $\Delta_y = y_{11}y_{22} - y_{12}y_{21}$, $\Delta_h = h_{11}h_{22} - h_{12}h_{21}$, $\Delta_T = AD - BC$

INTERCONNECTION OF NETWORKS

A large, complex network may be divided into subnetworks for the purposes of analysis and design. The subnetworks are modeled as two-port networks, interconnected to form the original network.

Three types of interconnection are: **Series, Parallel and Cascade**

Series

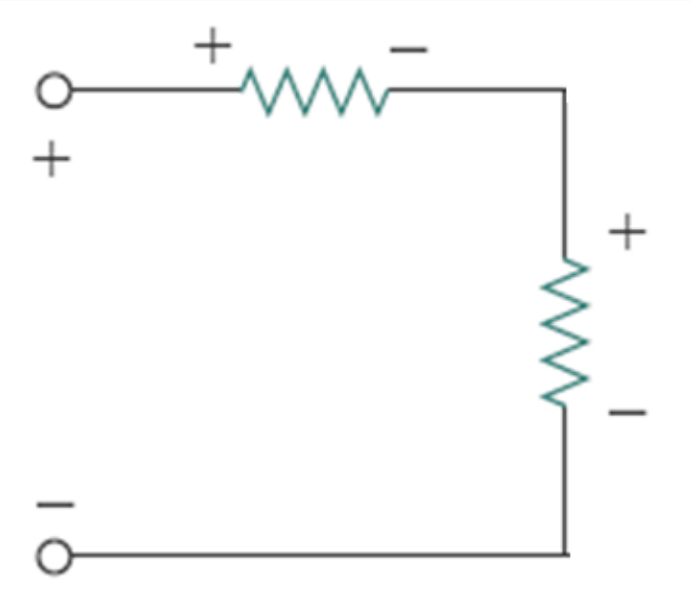

Parallel

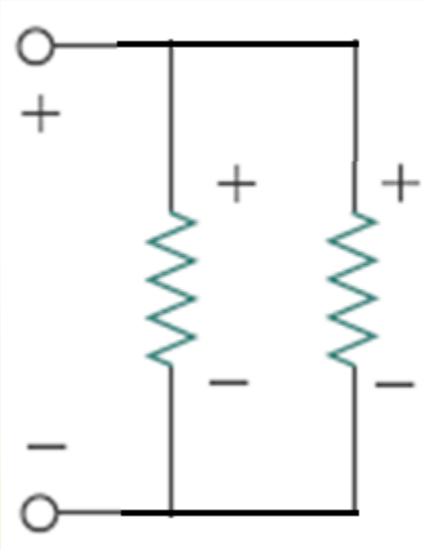

Series connection

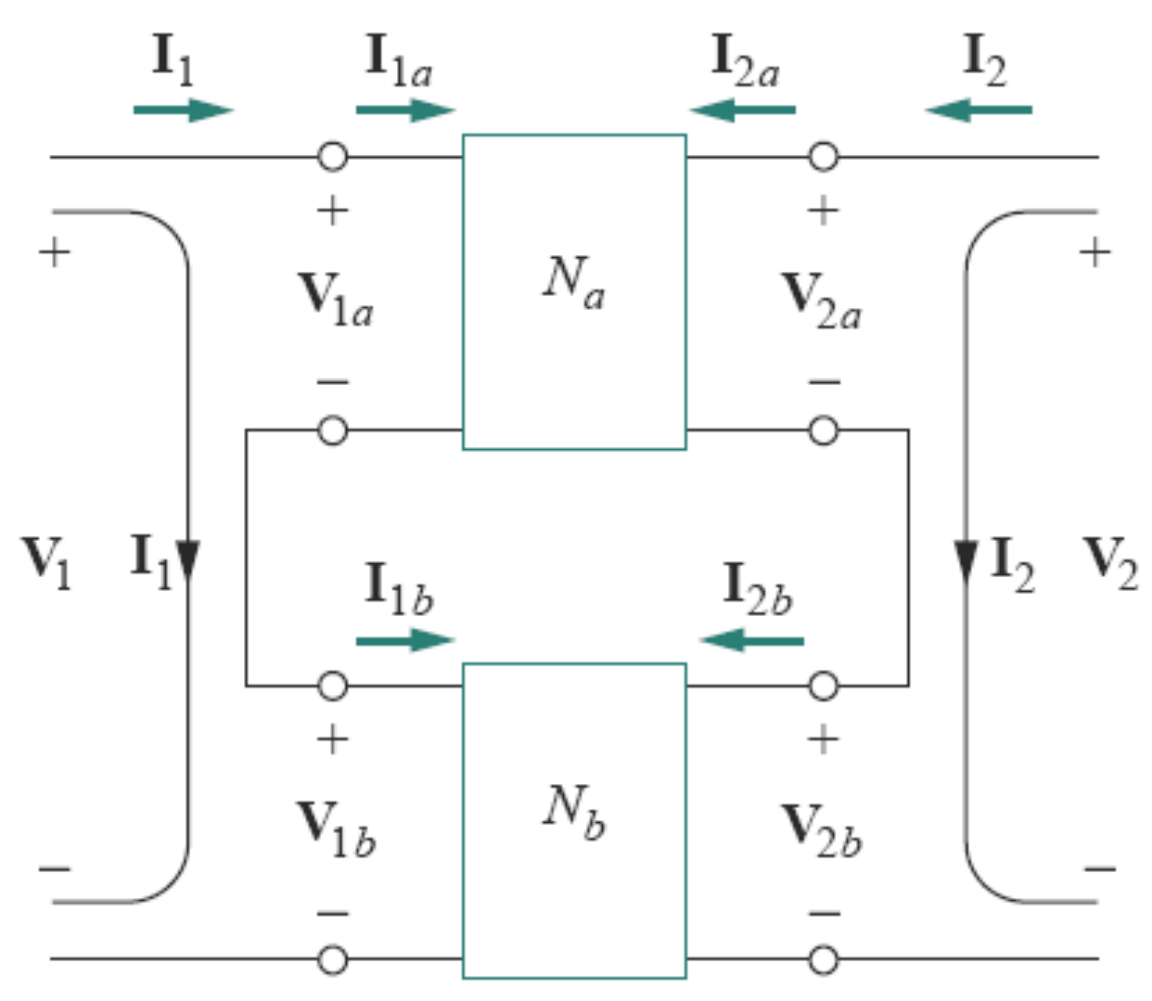

Series connection

For network *Na*,

$$\mathbf{V}_{1a} = \mathbf{z}_{11a}\mathbf{I}_{1a} + \mathbf{z}_{12a}\mathbf{I}_{2a}$$
$$\mathbf{V}_{2a} = \mathbf{z}_{21a}\mathbf{I}_{1a} + \mathbf{z}_{22a}\mathbf{I}_{2a}$$

for network *Nb*

$$\mathbf{V}_{1b} = \mathbf{z}_{11b}\mathbf{I}_{1b} + \mathbf{z}_{12b}\mathbf{I}_{2b}$$
$$\mathbf{V}_{2b} = \mathbf{z}_{21b}\mathbf{I}_{1b} + \mathbf{z}_{22b}\mathbf{I}_{2b}$$

$$\mathbf{I}_1 = \mathbf{I}_{1a} = \mathbf{I}_{1b}, \qquad \mathbf{I}_2 = \mathbf{I}_{2a} = \mathbf{I}_{2b}$$

$$\mathbf{V}_1 = \mathbf{V}_{1a} + \mathbf{V}_{1b} = (\mathbf{z}_{11a} + \mathbf{z}_{11b})\mathbf{I}_1 + (\mathbf{z}_{12a} + \mathbf{z}_{12b})\mathbf{I}_2$$
$$\mathbf{V}_2 = \mathbf{V}_{2a} + \mathbf{V}_{2b} = (\mathbf{z}_{21a} + \mathbf{z}_{21b})\mathbf{I}_1 + (\mathbf{z}_{22a} + \mathbf{z}_{22b})\mathbf{I}_2$$

z parameters for the overall network are

$$\begin{bmatrix} \mathbf{z}_{11} & \mathbf{z}_{12} \\ \mathbf{z}_{21} & \mathbf{z}_{22} \end{bmatrix} = \begin{bmatrix} \mathbf{z}_{11a} + \mathbf{z}_{11b} & \mathbf{z}_{12a} + \mathbf{z}_{12b} \\ \mathbf{z}_{21a} + \mathbf{z}_{21b} & \mathbf{z}_{22a} + \mathbf{z}_{22b} \end{bmatrix}$$

$$\boxed{[\mathbf{z}] = [\mathbf{z}_a] + [\mathbf{z}_b]}$$

Parallel connection

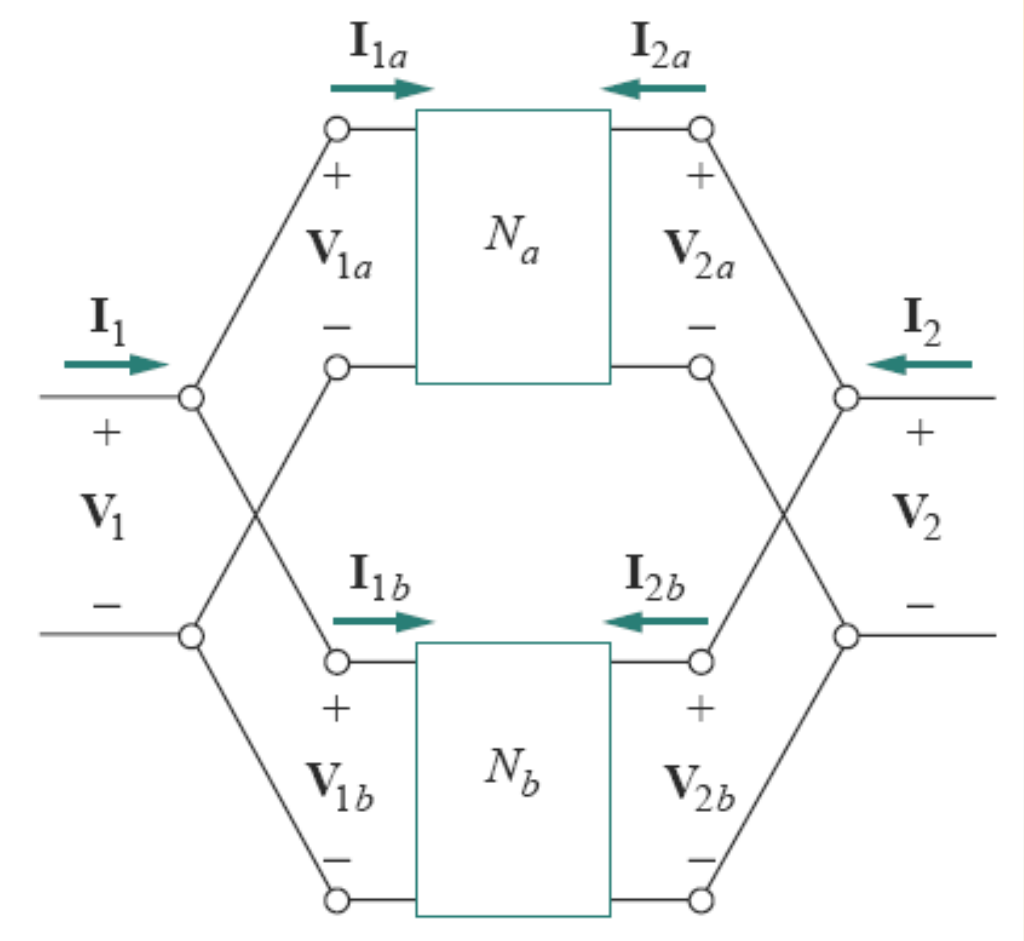

For network *Na*,

$$\mathbf{I}_{1a} = \mathbf{y}_{11a}\mathbf{V}_{1a} + \mathbf{y}_{12a}\mathbf{V}_{2a}$$
$$\mathbf{I}_{2a} = \mathbf{y}_{21a}\mathbf{V}_{1a} + \mathbf{y}_{22a}\mathbf{V}_{2a}$$

for network *Nb*

$$\mathbf{I}_{1b} = \mathbf{y}_{11b}\mathbf{V}_{1b} + \mathbf{y}_{12b}\mathbf{V}_{2b}$$
$$\mathbf{I}_{2a} = \mathbf{y}_{21b}\mathbf{V}_{1b} + \mathbf{y}_{22b}\mathbf{V}_{2b}$$

$$\mathbf{V}_1 = \mathbf{V}_{1a} = \mathbf{V}_{1b}, \qquad \mathbf{V}_2 = \mathbf{V}_{2a} = \mathbf{V}_{2b}$$
$$\mathbf{I}_1 = \mathbf{I}_{1a} + \mathbf{I}_{1b}, \qquad \mathbf{I}_2 = \mathbf{I}_{2a} + \mathbf{I}_{2b}$$

$$\mathbf{I}_1 = (\mathbf{y}_{11a} + \mathbf{y}_{11b})\mathbf{V}_1 + (\mathbf{y}_{12a} + \mathbf{y}_{12b})\mathbf{V}_2$$

$$\mathbf{I}_2 = (\mathbf{y}_{21a} + \mathbf{y}_{21b})\mathbf{V}_1 + (\mathbf{y}_{22a} + \mathbf{y}_{22b})\mathbf{V}_2$$

Thus, the y parameters for the overall network are

$$\begin{bmatrix} \mathbf{y}_{11} & \mathbf{y}_{12} \\ \mathbf{y}_{21} & \mathbf{y}_{22} \end{bmatrix} = \begin{bmatrix} \mathbf{y}_{11a} + \mathbf{y}_{11b} & \mathbf{y}_{12a} + \mathbf{y}_{12b} \\ \mathbf{y}_{21a} + \mathbf{y}_{21b} & \mathbf{y}_{22a} + \mathbf{y}_{22b} \end{bmatrix}$$

or

$$\boxed{[\mathbf{y}] = [\mathbf{y}_a] + [\mathbf{y}_b]}$$

Cascaded connection: The output of one network is the input of the other network.

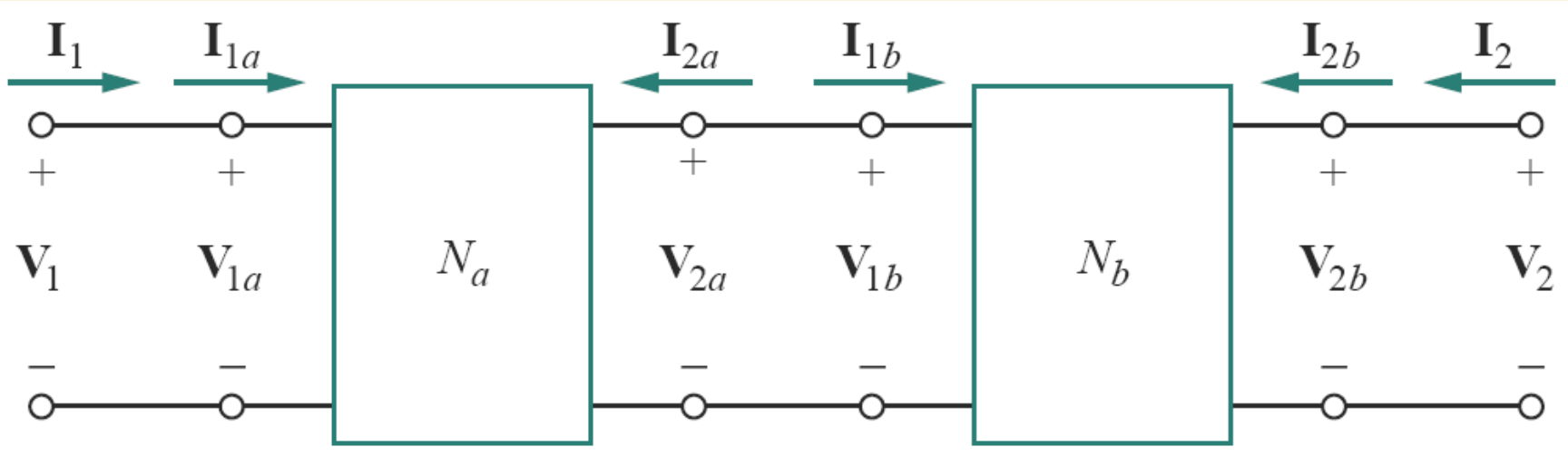

$$\begin{bmatrix} \mathbf{V}_{1a} \\ \mathbf{I}_{1a} \end{bmatrix} = \begin{bmatrix} \mathbf{A}_a & \mathbf{B}_a \\ \mathbf{C}_a & \mathbf{D}_a \end{bmatrix} \begin{bmatrix} \mathbf{V}_{2a} \\ -\mathbf{I}_{2a} \end{bmatrix}$$

$$\begin{bmatrix} \mathbf{V}_{1b} \\ \mathbf{I}_{1b} \end{bmatrix} = \begin{bmatrix} \mathbf{A}_b & \mathbf{B}_b \\ \mathbf{C}_b & \mathbf{D}_b \end{bmatrix} \begin{bmatrix} \mathbf{V}_{2b} \\ -\mathbf{I}_{2b} \end{bmatrix}$$

$$\begin{bmatrix} \mathbf{V}_1 \\ \mathbf{I}_1 \end{bmatrix} = \begin{bmatrix} \mathbf{V}_{1a} \\ \mathbf{I}_{1a} \end{bmatrix}, \qquad \begin{bmatrix} \mathbf{V}_{2a} \\ -\mathbf{I}_{2a} \end{bmatrix} = \begin{bmatrix} \mathbf{V}_{1b} \\ \mathbf{I}_{1b} \end{bmatrix}, \qquad \begin{bmatrix} \mathbf{V}_{2b} \\ -\mathbf{I}_{2b} \end{bmatrix} = \begin{bmatrix} \mathbf{V}_2 \\ -\mathbf{I}_2 \end{bmatrix}$$

$$\begin{bmatrix} \mathbf{V}_1 \\ \mathbf{I}_1 \end{bmatrix} = \begin{bmatrix} \mathbf{A}_a & \mathbf{B}_a \\ \mathbf{C}_a & \mathbf{D}_a \end{bmatrix} \begin{bmatrix} \mathbf{A}_b & \mathbf{B}_b \\ \mathbf{C}_b & \mathbf{D}_b \end{bmatrix} \begin{bmatrix} \mathbf{V}_2 \\ -\mathbf{I}_2 \end{bmatrix}$$

$$\begin{bmatrix} \mathbf{A} & \mathbf{B} \\ \mathbf{C} & \mathbf{D} \end{bmatrix} = \begin{bmatrix} \mathbf{A}_a & \mathbf{B}_a \\ \mathbf{C}_a & \mathbf{D}_a \end{bmatrix} \begin{bmatrix} \mathbf{A}_b & \mathbf{B}_b \\ \mathbf{C}_b & \mathbf{D}_b \end{bmatrix}$$

$$\boxed{[\mathbf{T}] = [\mathbf{T}_a][\mathbf{T}_b]}$$

Series connection

$$[\mathbf{z}] = [\mathbf{z}_a] + [\mathbf{z}_b]$$

Parallel connection

$$[\mathbf{y}] = [\mathbf{y}_a] + [\mathbf{y}_b]$$

Cascaded connection

$$[\mathbf{T}] = [\mathbf{T}_a][\mathbf{T}_b]$$

P.11: Obtain *z* parameter presentation of the circuit in Fig.

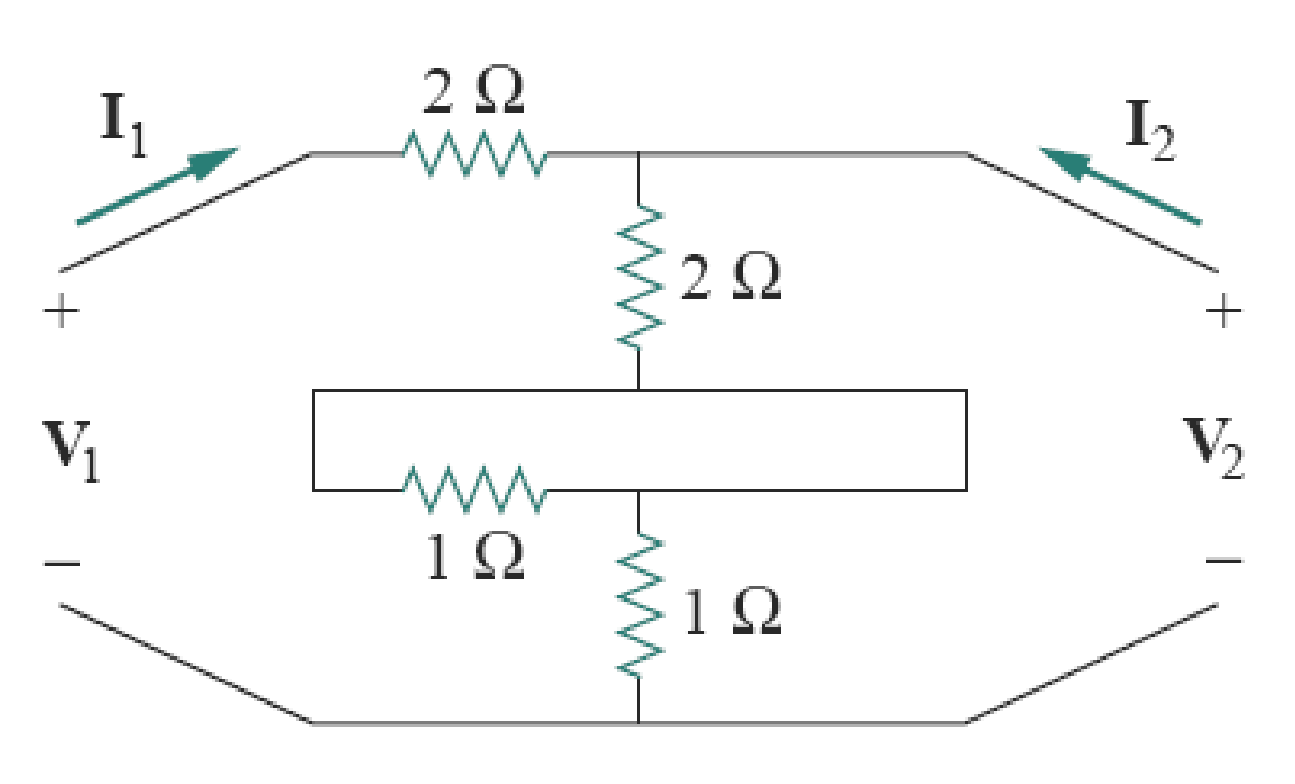

$$[Z]=[Z_a]+[Z_b]=\begin{bmatrix}4+2 & 2+1\\ 2+1 & 2+1\end{bmatrix}\Omega$$

$$\begin{bmatrix}\frac{1}{3} & -\frac{1}{3}\\ -\frac{1}{3} & \frac{2}{3}\end{bmatrix}\text{S}$$

P.12: Obtain *y* parameter presentation of the circuit in Fig.

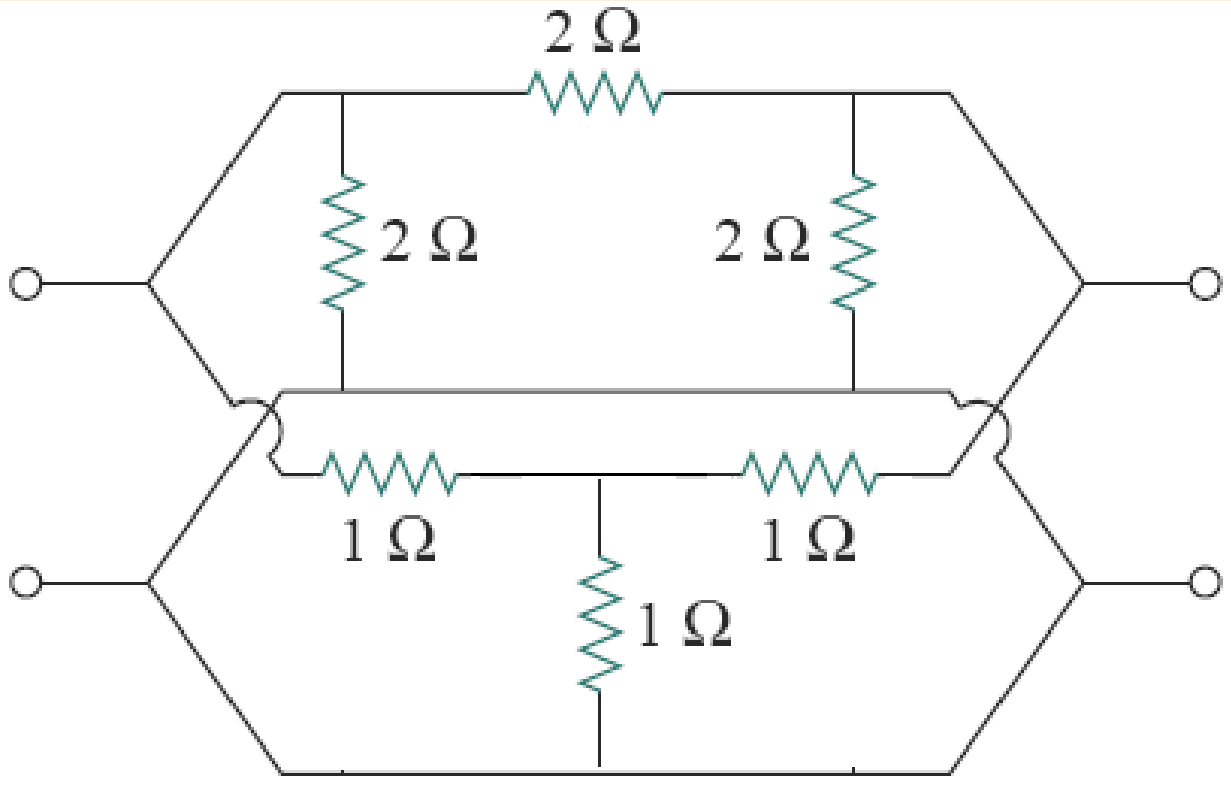

$$[Y]=[Y_a]+[Y_b]=\begin{bmatrix} 1+\frac{2}{3} & -\frac{1}{2}-\frac{1}{3} \\ -\frac{1}{2}-\frac{1}{3} & 1+\frac{2}{3} \end{bmatrix} S$$

P.13: Find the transmission parameters for the cascaded two-ports shown in Fig.

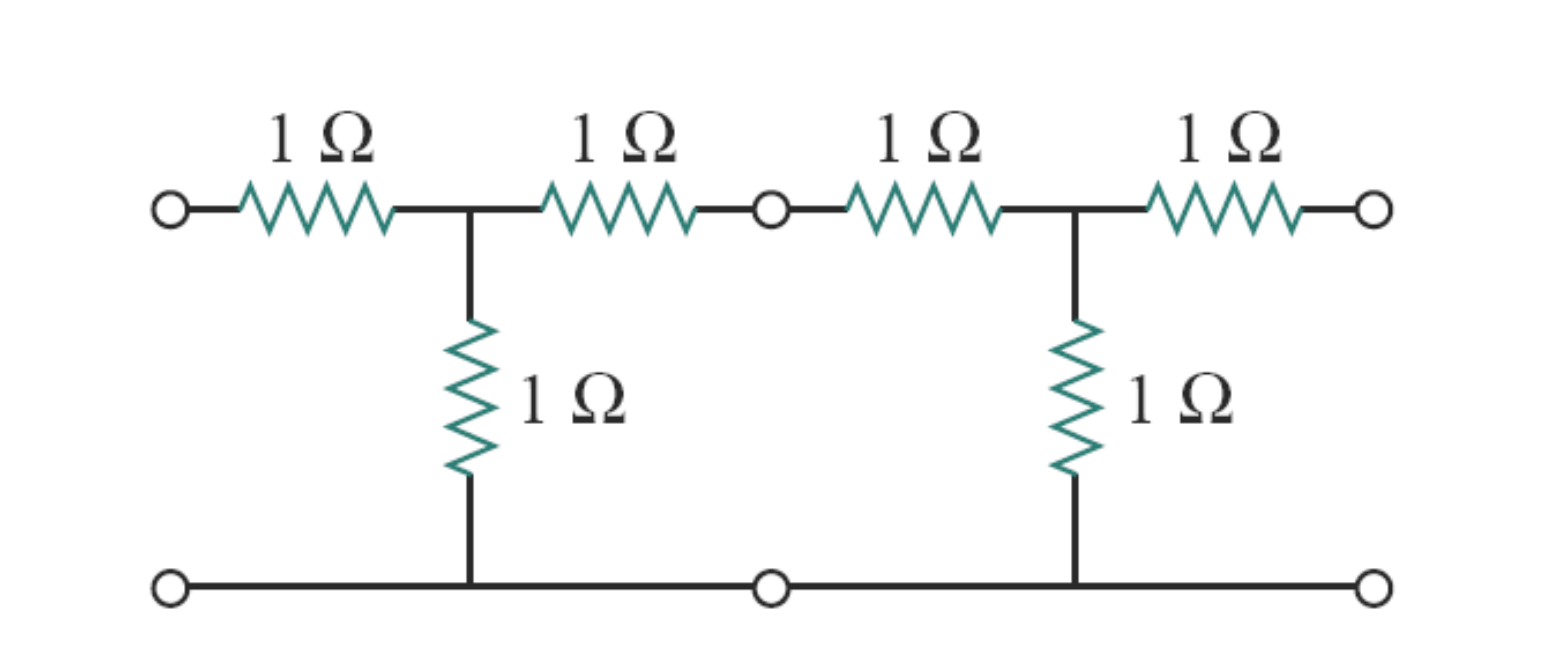

$$\begin{bmatrix} 7 & 12\ \Omega \\ 4\ \mathrm{S} & 7 \end{bmatrix}$$

P.14: Find the transmission parameters for the cascaded two-ports shown in Fig.

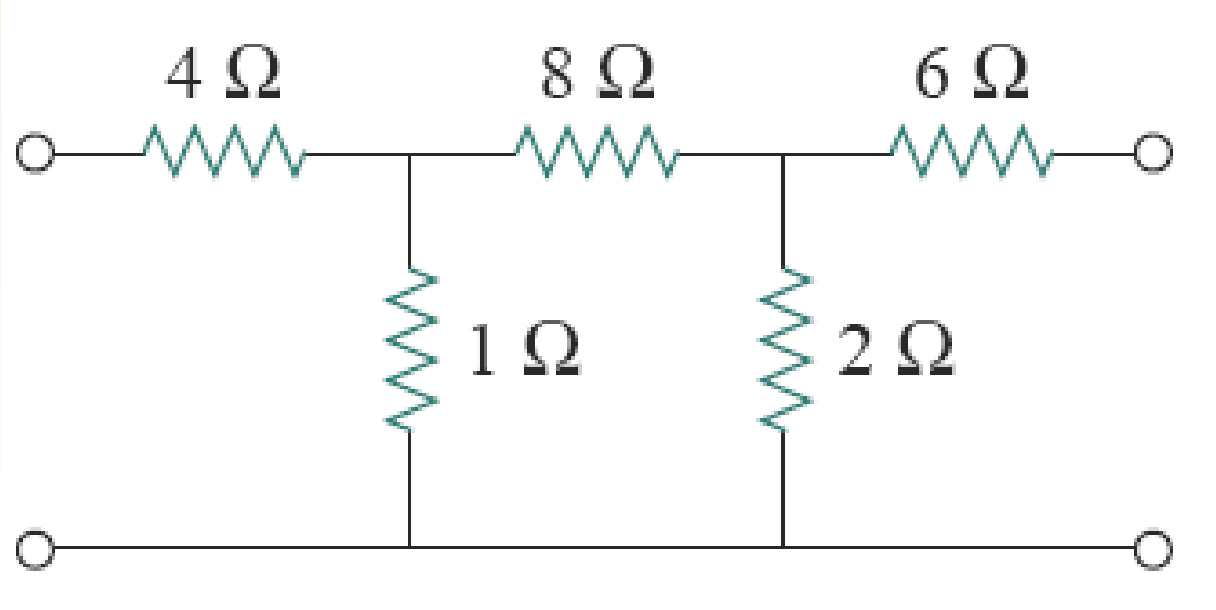

$$[\mathbf{T}] = [\mathbf{T}_a][\mathbf{T}_b] = \begin{bmatrix} 5 & 44 \\ 1 & 9 \end{bmatrix} \begin{bmatrix} 1 & 6 \\ 0.5 & 4 \end{bmatrix}$$

$$= \begin{bmatrix} 27 & 206\ \Omega \\ 5.5\ \mathrm{S} & 42 \end{bmatrix}$$

P.15: For the two-port in Fig.

$$[\mathbf{h}] = \begin{bmatrix} 16\ \Omega & 3 \\ -2 & 0.01\ \text{S} \end{bmatrix}$$

Find:

(a) V_2/V_1 (b) I_2/I_1

(c) I_1/V_1 (d) V_2/I_1

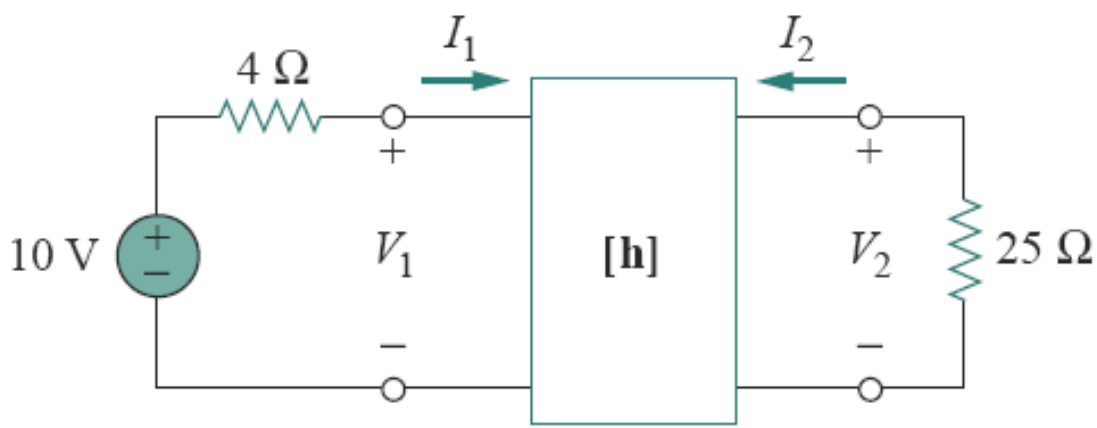

(a) 0.2941, (b) −1.6, (c) 7.353×10^{-3} S, (d) 40 Ω

P.16: Determine the Thevenin equivalent at the output port of the circuit in Fig.

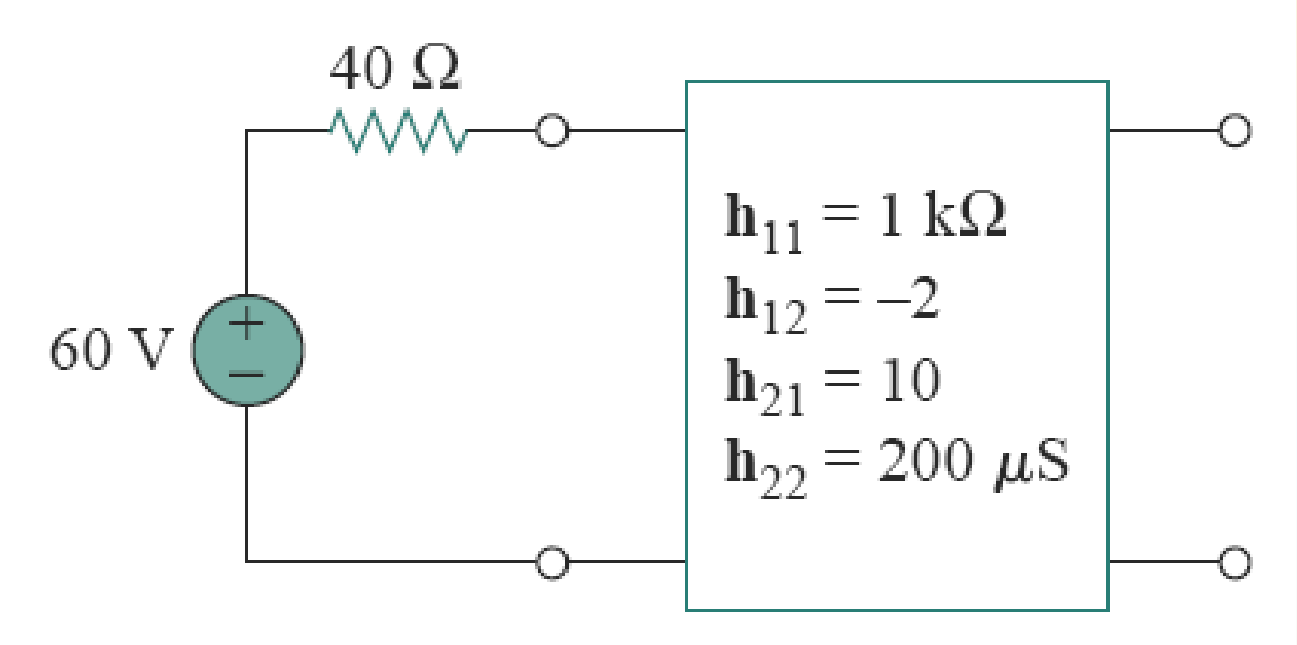

$$Z_{th} = 51.46\Omega$$

$$V_{th} = -29.69V$$

P.17: For the two-port circuit in Fig.

$$[\mathbf{z}] = \begin{bmatrix} 40 & 60 \\ 80 & 120 \end{bmatrix} \Omega$$

(a) Find Z_L for maximum power transfer to the load.
(b) Calculate the maximum power delivered to the load.

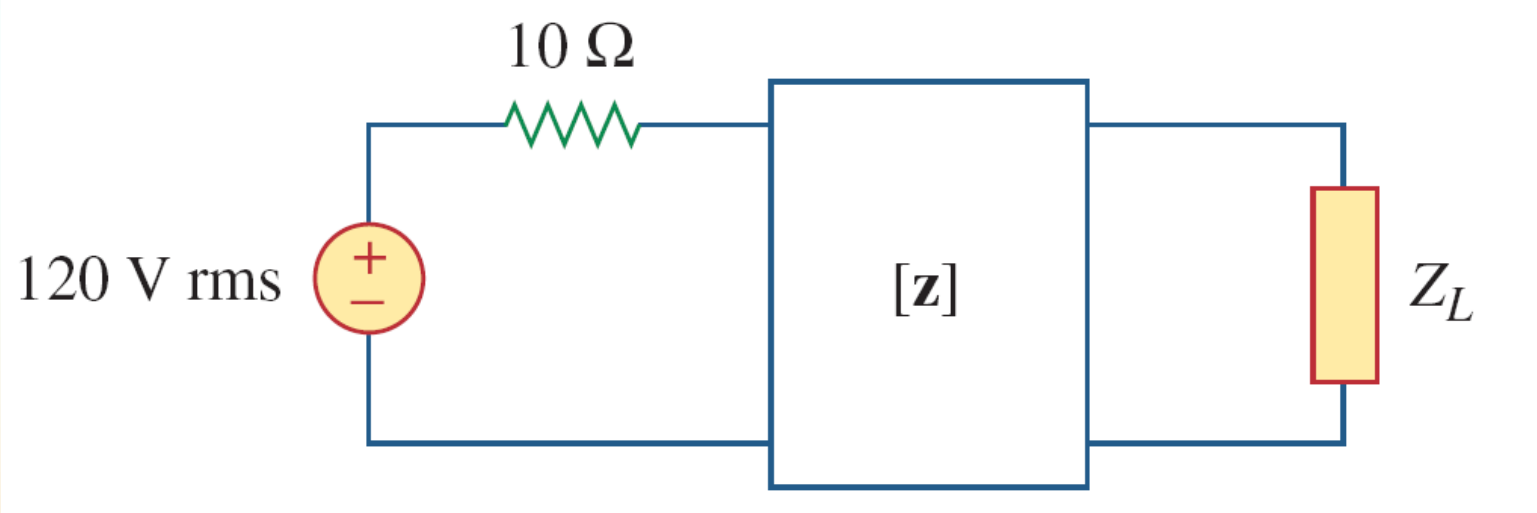

P.18: Obtain the *h* parameters of the two-port in Fig.

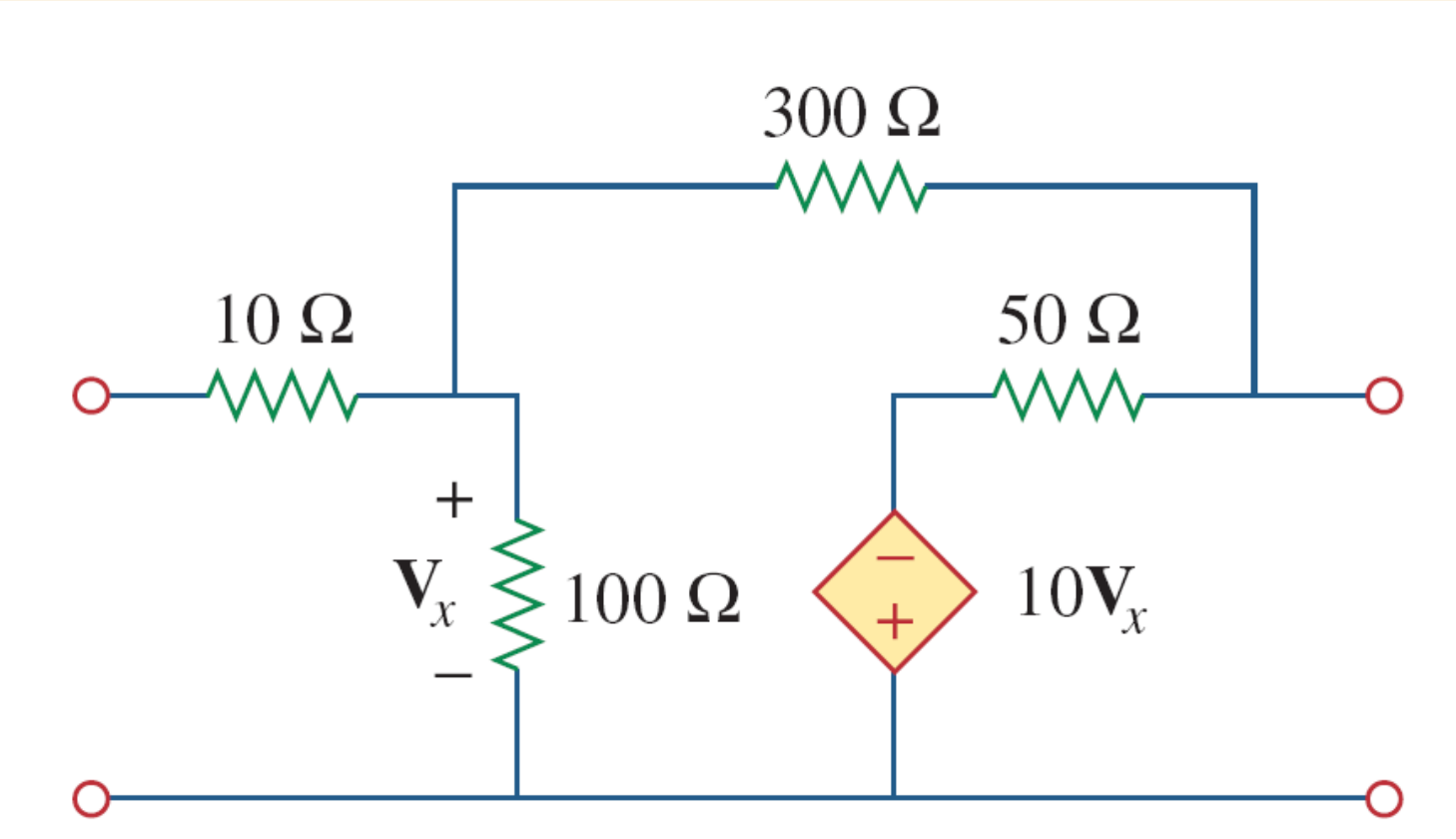

$$h=\begin{bmatrix} 85 & 0.25 \\ 14.75 & 0.0725 \end{bmatrix}$$

P.19: Determine Z, Y, h and T parameters

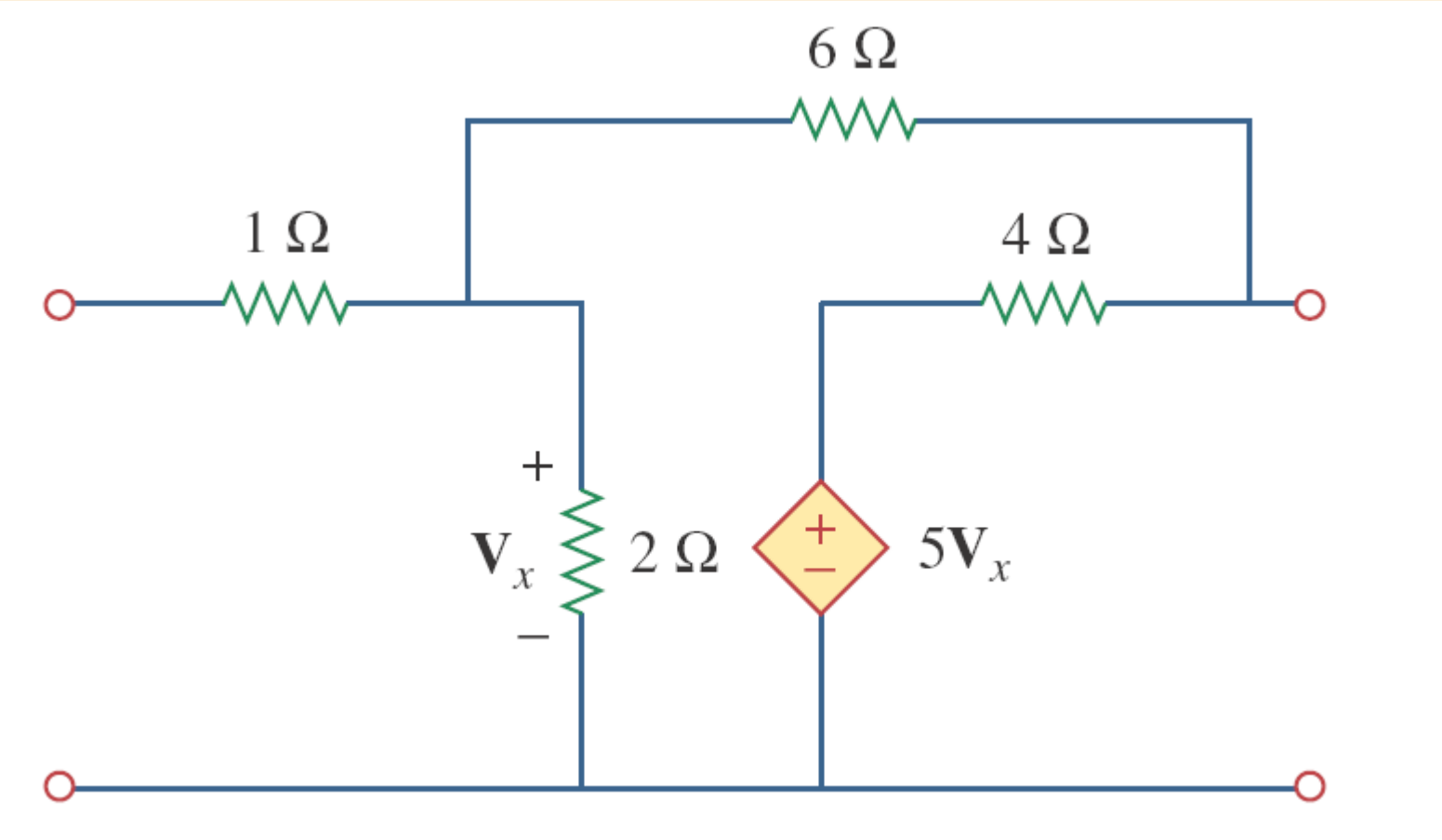

T parameters

$$\begin{bmatrix} 0.3235 & 1.176\ \Omega \\ 0.02941\ \text{S} & 0.4706 \end{bmatrix}$$

P.20: Determine T parameters through cascaded networks

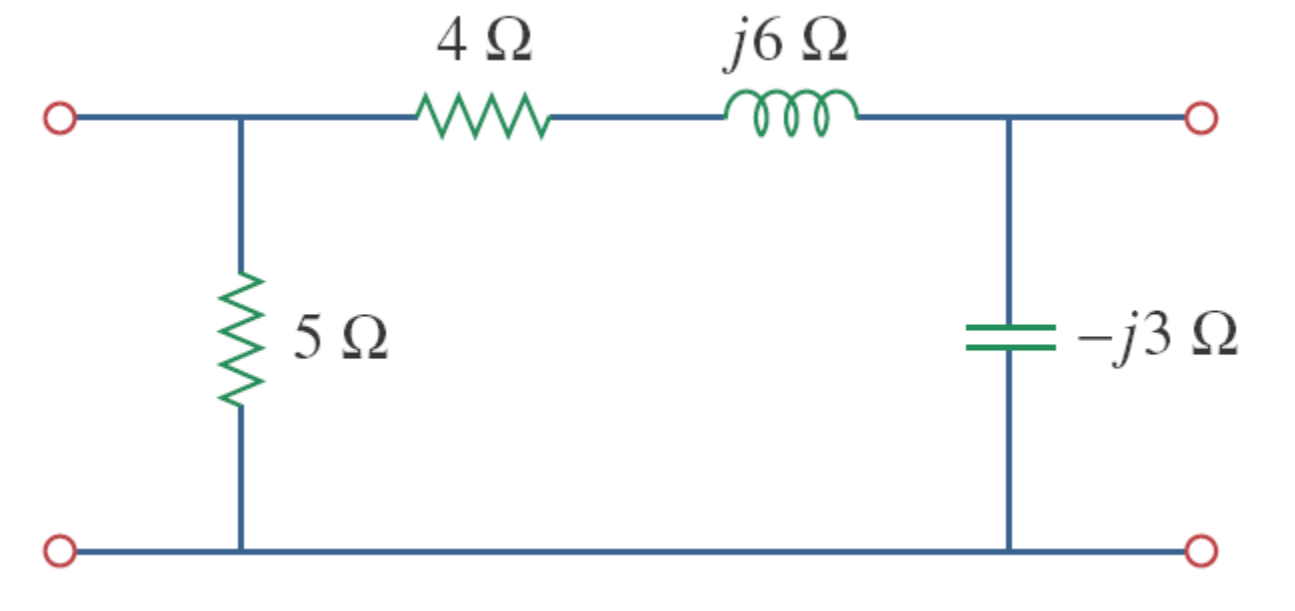

h parameters

$$\begin{bmatrix} (3.077 + j1.2821)\,\Omega & 0.3846 - j0.2564 \\ -0.3846 + j0.2564 & (76.9 + 282.1)\,\text{mS} \end{bmatrix}$$