Reg. No:

VIT
Vellore Institute of Technology

Final Assessment Test – November 2026

Course: **BAEEE101 - Basic Engineering**

Class NBR(s): **5764, 5769, 5773, 5777, 5789, 5956, 5962, 5967, 5973, 5977, 5989, 6099, 6157**

Slot: **A1+TA1**

Time: **1Hr. 30 Mins**

Max. Marks: **50**

➢ KEEPING MOBILE PHONE/ANY ELECTRONIC GADGETS, EVEN IN 'OFF' POSITION IS TREATED AS EXAM MALPRACTICE

➢ DON'T WRITE ANYTHING ON THE QUESTION PAPER

General Instruction

Module 1 & 2 (Electrical and Electronics Engineering) **Time: 9:30 am to 11:00 am**

Course Outcomes:

CO1: Analyse the electrical circuits, electrical motors and the role of power electronics in industrial applications

CO2: Aquire foundational knowledge of electronic devices and communication systems.

CO3: Apply BIS standards to create basic 2D and 3D representations of engineering components.

CO4: Explain the fundamental principles and applications of manufacturing processes, energy conversion systems, and mechanical automation technologies.

CO5: Analyse real-world examples where bio-inspired solutions have led to breakthroughs in engineering.

BL – Blooms Taxonomy Level (1 – Remember, 2 – Understand, 3 – Apply, 4 – Analyse, 5 – Evaluate, 6 – Create)

Part - A (5 X 10 = 50 Marks)

Answer all Question(s)

Q1. Apply the superposition theorem to determine the magnitude and direction of the current flowing through branch AB in Fig. 1. **10M** **CO1** **BL3**

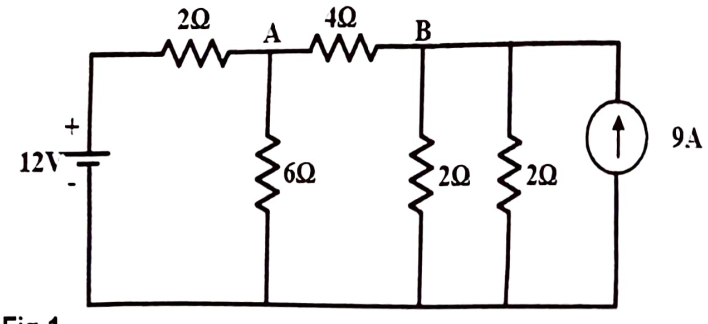

Fig.1

Q2. For the circuit shown in Fig. 2, use the mesh analysis method to determine the voltage drop across each resistor.

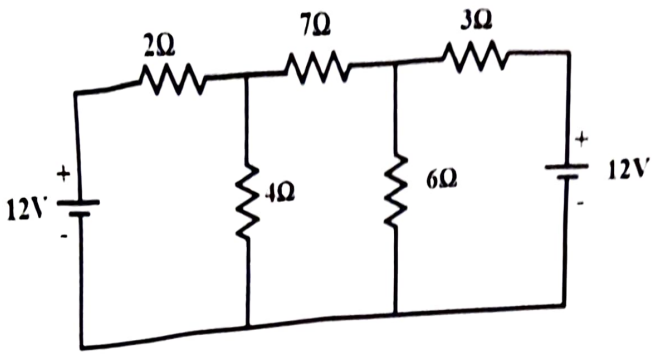

Fig 2

10M CO1 BL3

Q3. Analyze the series RLC circuit shown in Fig. 3 at a supply frequency of 50 Hz. Determine the voltage across each element, real power, reactive power, apparent power, and power factor. Identify whether the circuit operates at a leading or lagging power factor. **10M CO1 BL3**

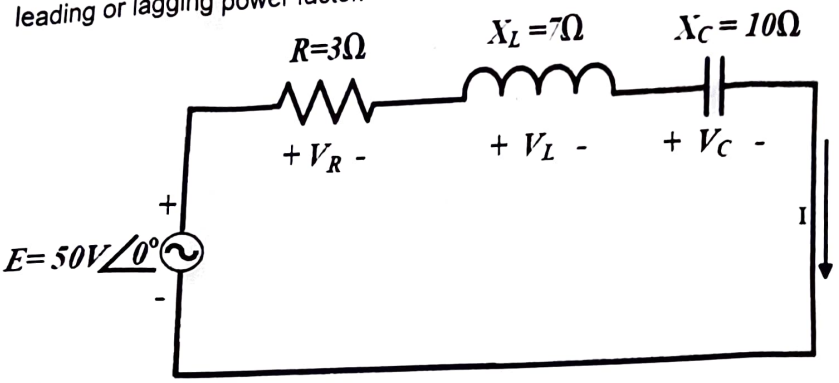

Fig 3

Q4. With neat circuit diagrams and graphs, explain the input and output characteristics of a BJT in the common-emitter configuration. Also, explain how the transistor can be used as an electronic switch. **10M CO2 BL3**

Q5. **a)** Explain the working of a general communication system with a neat block diagram, and describe the functions of its essential components. **10M CO2 BL3**

(OR)

b) Explain modulation and its need in communication systems. Compare Amplitude Modulation (AM) and Frequency Modulation (FM). **10M CO2 BL3**

⇔⇔⇔⇔⇔⇔

Reg. No:

VIT
Vellore Institute of Technology

Final Assessment Test – November 2026

Course: **BAEEE101 - Basic Engineering**

Class NBR(s): **5764, 5769, 5773, 5777, 5789, 5956, 5962, 5967, 5973, 5977, 5989, 6099, 6157**

Slot: **A1+TA1**

Time: **1Hr. 30 Mins**

Max. Marks: **50**

- KEEPING MOBILE PHONE/ANY ELECTRONIC GADGETS, EVEN IN 'OFF' POSITION IS TREATED AS EXAM MALPRACTICE
- DON'T WRITE ANYTHING ON THE QUESTION PAPER

General Instruction

Module 3 & 4 (Mechanical Engineering) Time: 11:05 am to 12:35 pm

Course Outcomes:

CO1: Analyse the electrical circuits, electrical motors and the role of power electronics in industrial applications

CO2: Aquire foundational knowledge of electronic devices and communication systems.

CO3: Apply BIS standards to create basic 2D and 3D representations of engineering components.

CO4: Explain the fundamental principles and applications of manufacturing processes, energy conversion systems, and mechanical automation technologies.

CO5: Analyse real-world examples where bio-inspired solutions have led to breakthroughs in engineering.

BL – Blooms Taxonomy Level (1 – Remember, 2 – Understand, 3 – Apply, 4 – Analyse, 5 – Evaluate, 6 – Create)

Part - A (5 X 10 = 50 Marks)

Answer all Question(s)

Q1. Draw the front view, top view and right side view for the component shown in Fig. Use first angle projection method. **Note: Use landscape orientation of answer sheet.** **10M** **CO3** **BL3**

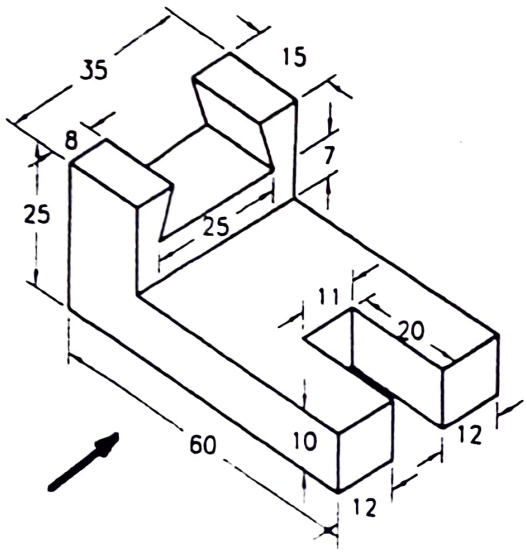

Q2.	Draw the isometric view of a cylinder of diameter 60 mm and height 65 mm. The cylinder is resting on horizontal plane (HP) on its base with its axis parallel to vertical plane (VP) .	10M	CO3	BL3
Q3.	a) Explain the sand-casting process with a neat labelled diagram. Describe the functions of the pouring basin, sprue, runner, riser, core, flask, and pattern.	10M	CO4	BL2
	(OR)			
	b) What is machining? With neat sketches, describe the single point cutting tool and multi-point cutting tool.	10M	CO4	BL2
Q4.	Explain the working principle of a two-stroke petrol engine with a neat, labelled diagram.	10M	CO4	BL3
Q5.	Describe the following terms: (i) kinematic link (ii) kinematic pair (iii) kinematic chain with suitable examples for each.	10M	CO4	BL3

⇔⇔⇔⇔⇔⇔