Transient Analysis of RC circuits

- Consider the RC circuit shown in Fig (a). Assume that the switch is closed at time t = 0 and assume that the voltage across the capacitor at the time of switching is zero.

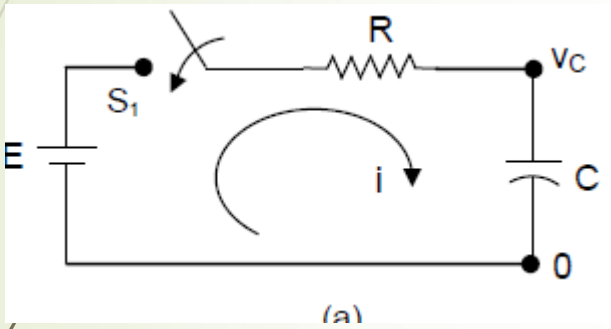

(a)

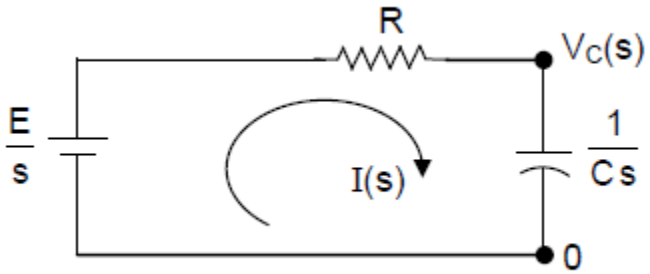

(b)

- The transform circuit for time t > 0 is shown in Fig. (b). From this

$$I(s) = \frac{E/s}{R + \frac{1}{Cs}} = \frac{EC}{RCs + 1} = \frac{E/R}{s + \frac{1}{RC}}$$

- Taking inverse LT

$$i(t) = \frac{E}{R} e^{-\frac{1}{RC}t}$$

- Voltage across the capacitor is

$$V_C(s) = \frac{1}{Cs} I(s) = \frac{E/RC}{s\left(s + \frac{1}{RC}\right)} = E\left(\frac{1}{s} - \frac{1}{s + \frac{1}{RC}}\right)$$

- Taking inverse LT, we get the capacitor voltage as

$$v_C(t) = E\left(1 - e^{-\frac{1}{RC}t}\right)$$

- The circuit current and the voltage across the capacitor vary as shown in Fig. below

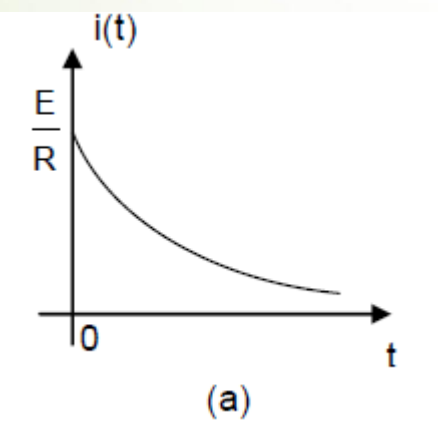

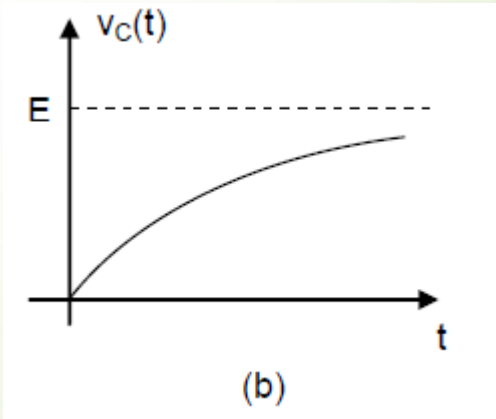

Transient response of RC circuit – With initial conditions applied

Consider the circuit shown in Fig.(a). Let us say that with the switch in position S_1, steady state condition is reached. Now, the capacitor is charged to voltage E and will act as open circuit.

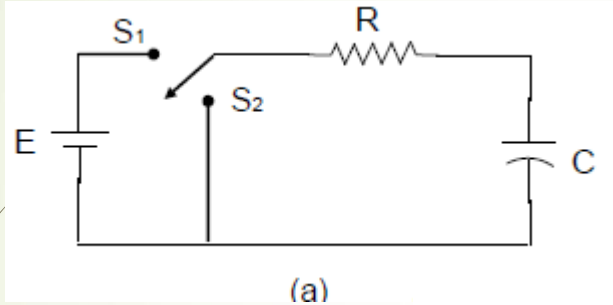

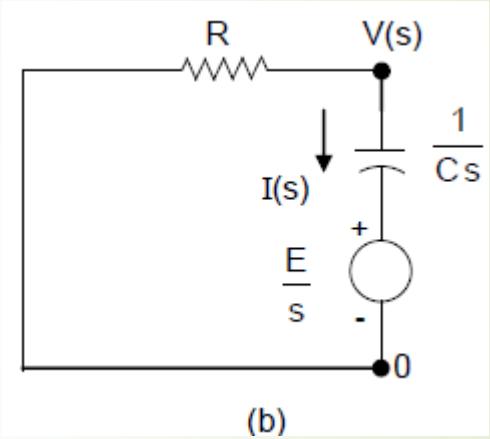

$V_C(0+) = V_C(0-) = E$

At time t = 0, the switch is turned to position S_2. The transform circuit for time t > 0 is shown in Fig. (b).

Considering the transformed circuit

$$I(s) = -\frac{E/s}{R + \frac{1}{Cs}} = -\frac{EC}{RCs + 1} = -\frac{E/R}{s + \frac{1}{RC}}$$

Taking inverse LT

$$i(t) = -\frac{E}{R} e^{-\frac{1}{RC}t}$$

The capacitor current exponentially changes from – E/R to zero with time constant 1/ RC.

Since R I(s) + $V_C(s)$ = 0 the voltage across the capacitor is

$$V_C(s) = -R\,I(s) = \frac{E}{s + \frac{1}{RC}}$$

Taking inverse LT $$v_C(t) = E\,e^{-\frac{1}{RC}t}$$

The Capacitor voltage decays exponentially with time constant 1 / RC.

The current and voltage transients are given by the above two equations are shown in Figure

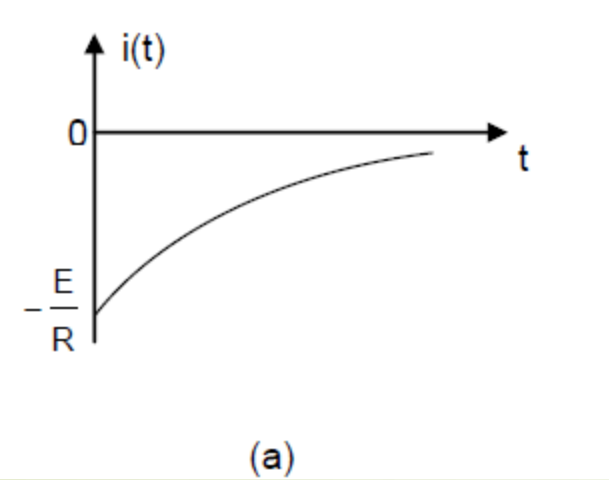

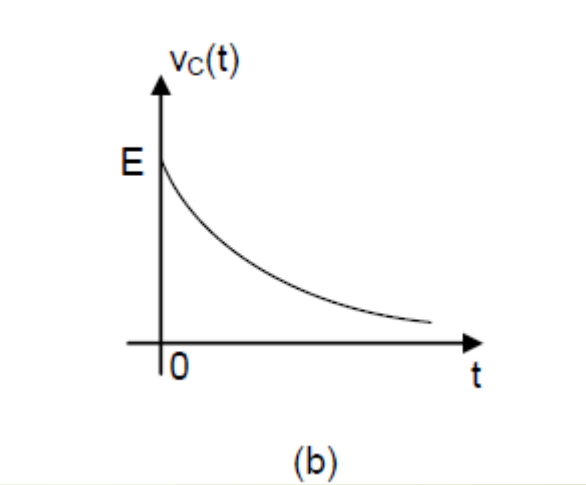

General case of finding the Capacitor Voltage

- In the previous discussion, it was assumed that the initial capacitor voltage $V_C(0) = 0$.
- There may be initial charge in the capacitor resulting non-zero initial capacitor voltage . Further, the circuit arrangements can also cause non-zero initial capacitor voltage.
- For this purpose consider the circuit shown below. The switch was in position S_1 for a long time. It is moved from position S_1 to S_2 at time t = 0.

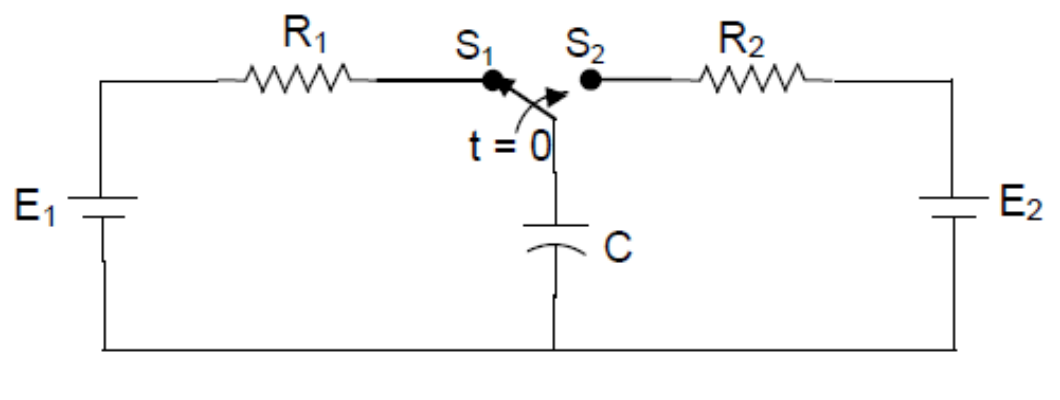

We shall assume the following:

1. At time $t = 0^-$ the circuit was at steady state condition with the switch in position S_1
2. After switching to position S_2, the circuit is allowed to reach the steady state condition Thus, we are interested about the transient analysis for one switching period only.

Initial capacitor voltage $V_C(0)$ is E_1 and the final capacitor current $V_C(\infty)$,will be E_2.

The more general expression for the Capacitor voltage can be obtained as

$$V_C(t) = V_C(\infty) + [V_C(0) - V_C(\infty)]e^{-(1/CR_2)t}$$

Circuit with multiple resistances

In order to calculate the time constant 1/RC for circuits with multiple resistances, following steps to be followed

1. Calculate the Thevenin's Equivalent resistance across the Inductor (i.e inductor as the load)
2. Time constant is given by 1/CRth

Summary of formulae useful for transient analysis on RC circuits

1. Time constant $\tau = RC$ $\alpha = 1 / RC$

2. When the capacitor is discharging from the initial voltage of E

$$v_C(t) = E\, e^{-\frac{1}{RC}t}$$

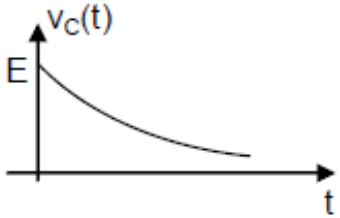

3. When the capacitor is charged from zero initial voltage to final voltage of E

$$v_C(t) = E\,(1 - e^{-\frac{1}{RC}t})$$

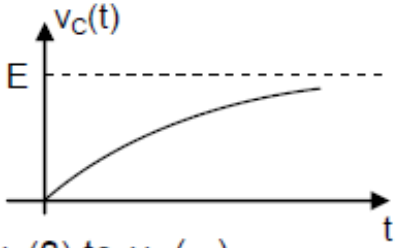

4. When the capacitor voltage changes from $v_C(0)$ to $v_C(\infty)$

$$v_C(t) = v_C(\infty) + [v_C(0) - v_C(\infty)]\, e^{-\frac{1}{RC}t}$$

Plot of $v_C(t)$ depends on values of $v_C(0)$ and $v_C(\infty)$

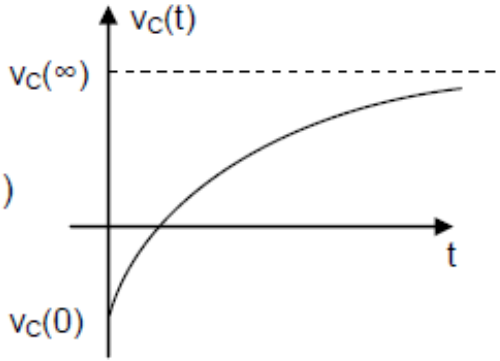

5. Capacitor current $i_C(t) = C\dfrac{dv_C(t)}{dt}$

$$i(t) = \frac{E}{R}\, e^{-\frac{1}{RC}t}$$

Problems

P.4.15 Consider the circuit shown below. The switch was in closed position for a long time. It is opened at time t = 0. Find the current i(t) for t > 0.

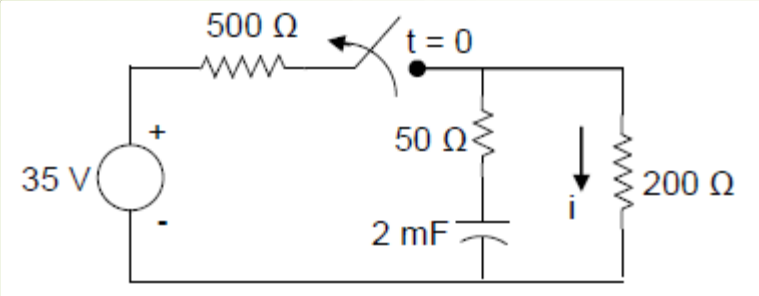

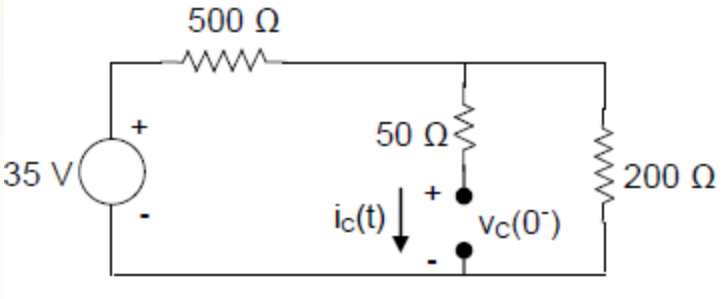

- Solution Circuit at time $t = 0^-$ is shown.

$$v_C(0^-) = 35 \times \frac{200}{200 + 500} = 10 \text{ V}$$

- For time t > 0, capacitor voltage of 10 V is discharged through a resistor of 250 Ω.
- Time constant RC = 250 X 2 X 10^{-3} = 0.5 s;

So $V_C(t) = V_C(\infty) + [V_C(0) - V_C(\infty)]e^{-(1/CR)t}$

$= 0+(10 - 0)\, e^{-(1/CR)t} = 10\, e^{-(1/0.5)t}$

$i_C(t) = (E/R)\, e^{-t/RC} = (10/250)e^{-t/0.5} = 0.04\, e^{-2t}$ A

P.4.16 A series RC circuit has a constant voltage of E, applied at time t = 0 as shown in Fig. below. The capacitor has no initial charge. Find the equations for i, V_R and V_C. Sketch the wave shapes. E = 100 V R = 5000 Ω C = 20 μF

10

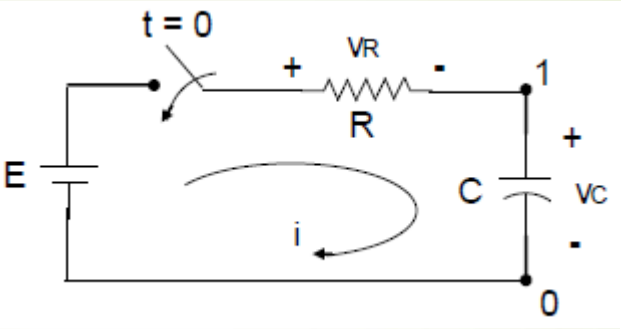

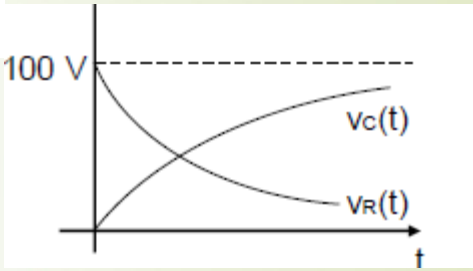

Solution

Since there is no initial charge, $V_C(0^+) = V_C(0^-) = 0$

For t > 0, capacitor is charged to final voltage of 100 V.

Time constant RC = 5000 x 20 x 10^{-6} = 0.1 sec.

$V_C(t) = V_C(\infty) + [V_C(0) - V_C(\infty)]e^{-(1/CR)t}$

$V_C(0) = 0$; $V_C(\infty) = 100$; So $V_C(t) = 100+[0 - 100]\, e^{-(1/0.1)t}$

$= 100\,(1 - e^{-10t})$ V

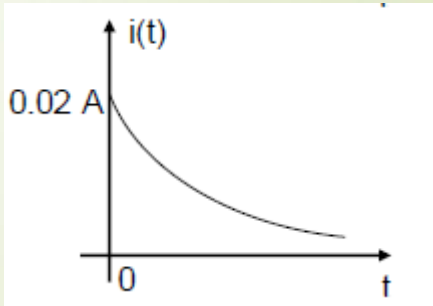

$i_C(t) = (E/R)\, e^{-t/RC} = (100/5000)e^{-t/0.1} = 0.02\, e^{-10t}$ A

Voltage across the resistor is $V_R(t) = R\, i(t) = 5000 * 0.02\, e^{-10t} = 100\, e^{-10t}$ A

P.4.17

11

Consider the circuit shown. The switch was in open position for a long time. It is operated as shown. Compute and plot the capacitor voltage for t > 0. Also find the time at which the capacitor voltage is 50 V.

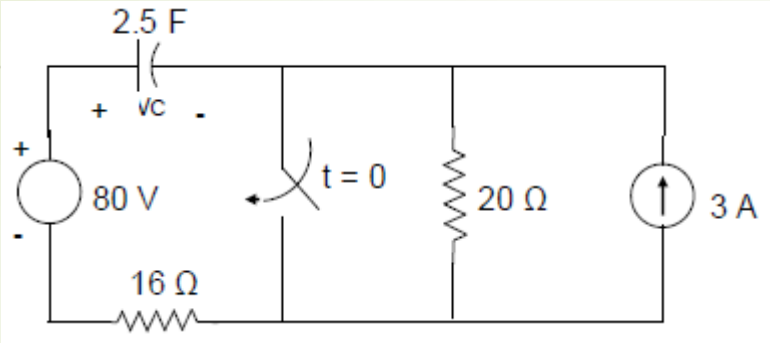

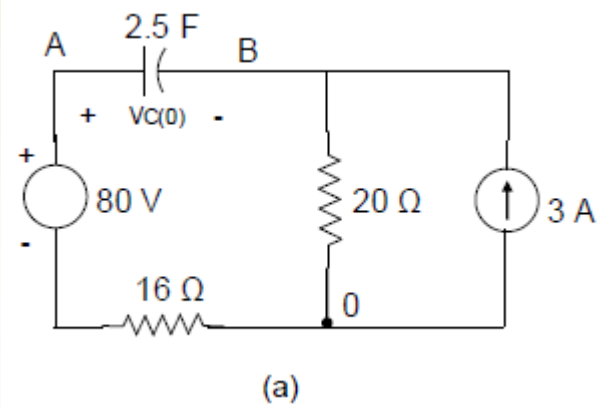

Solution Circuit at time t = 0^- is shown in Fig. (a).

Capacitor acts as open circuit. $I_{16\,\Omega} = 0$.

Voltage $V_A = 80$ V and voltage $V_B = 60$ V

Thus $V_C(0) = 20$ V

With the switch is in closed position, the circuit will be as shown in Fig. (b).

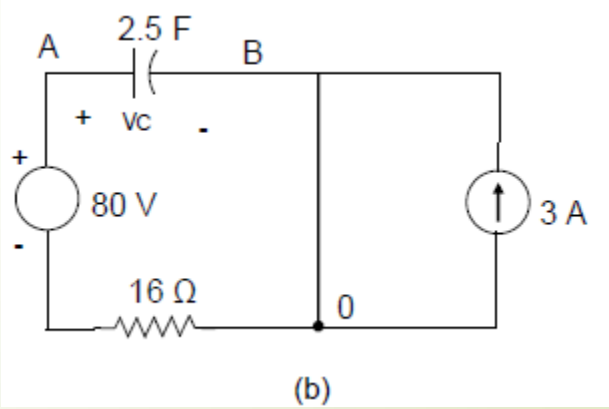

With the steady state reached, Capacitor acts as open circuit.

$I_{16\,\Omega} = 0$. Voltage $V_A = 80$ V and voltage $V_B = 0$ V.

Thus $V_C(\infty) = 80$ V

RC = 16 X 2.5 = 40 s

Using $V_C(t) = V_C(\infty) + [V_C(0) - V_C(\infty)]e^{-(1/CR)t}$

$$V_C(t) = 80+[20 - 80]\ e^{-(1/40)t}$$

$$= 80 - 60\ e^{-0.025t}\ V$$

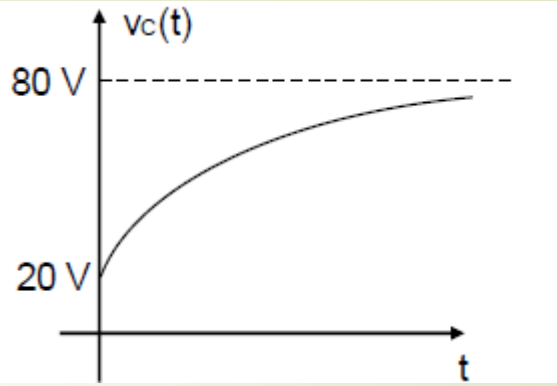

Plot of the capacitor voltage is shown.

Let t_1 be the time at which the capacitor voltage = 50 V.

Then $80 - 60\ e^{-0.025*t1} = 50$

i.e. $60e^{-0.025t1} = 30$ or $e^{-0.025t} = 0.5$

Thus $t_1 = 27.728$ s

P.4.18 Consider the circuit shown below. The switch was in position S1 for a long time. It is operated as shown. Compute and plot the capacitor voltage for t > 0. Also find the time at which the capacitor voltage becomes zero.

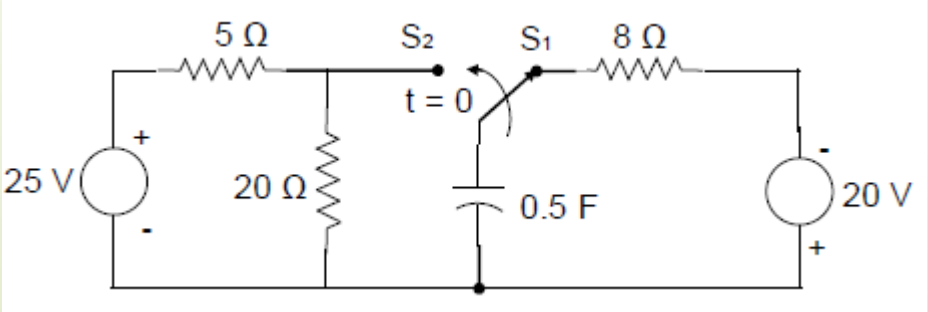

Solution

Voltage $V_C(0)$ = - 20 V Circuit for time t > 0 and its Thevenin's equivalent are shown below.

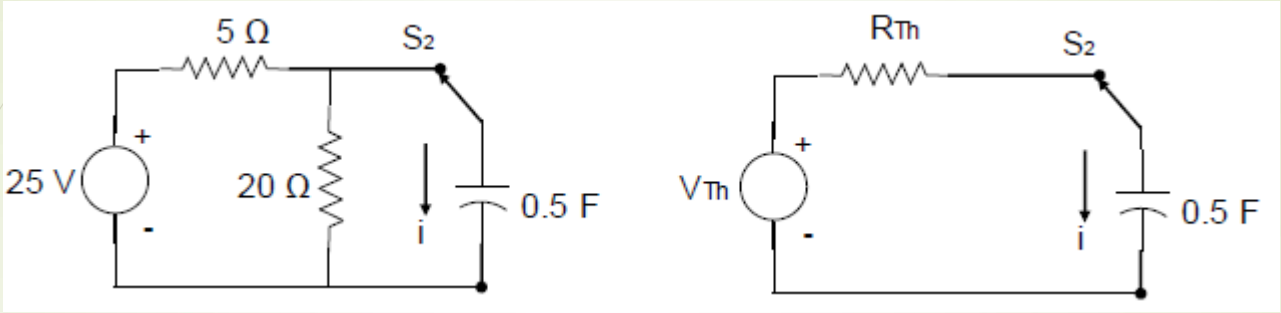

$$V_{Th} = \frac{20}{20+5} \times 25 = 20 \text{ V}$$

So $V_C(\infty) = 20$ V

$$R_{Th} = 5 \,||\, 20 = 4\ \Omega;$$

RC = 4 X 0.5 = 2 s

Using $V_C(t) = V_C(\infty) + [V_C(0) - V_C(\infty)]e^{-(1/CR)t}$

$$V_C(t) = 20 + [-20 - 20]\, e^{-(1/2)t}$$

$$= 20 - 40e^{-0.5t} \text{ V}$$

$$i_C(t) = (E/R)\, e^{-t/RC} = (40/4)e^{-0.5t} = 10\, e^{-0.5t} \text{ A}$$

Let t1 be the time at which the capacitor voltage reaches zero value.

Then

$20 - 40e^{-0.5t1} = 0$; i.e. $e^{-0.5t1} = 0.5$

Or $-0.5\,t_1 = -0.6931$; Thus $t_1 = 1.3863$ s

Capacitor voltage reaches zero value at time $t_1 = 1.3863$ s

RC Circuit	RL Circuit
$\tau = RC$; $\alpha = 1 / RC$	$\tau = L / R$; $\alpha = R / L$
Switching at $t = 0$; $V_C(0^+) = V_C(0^-)$	Switching at $t = 0$; $i_L(0^+) = i_L(0^-)$
With DC, at SS capacitor acts as open circuit	With DC, at SS inductor acts as short circuit
$V_C(0) \neq 0$; $V_C(\infty) = 0$; Then $V_C(t) = V_C(0)\, e^{-t/\tau}$	$i_L(0) \neq 0$; $i_L(\infty) = 0$; Then $i_L(t) = i_L(0)e^{-t/\tau}$
$V_C(0) = 0$; $V_C(\infty) \neq 0$; Then $V_C(t) = V_C(\infty)(1 - e^{-t/\tau})$	$i_L(0) = 0$; $i_L(\infty) \neq 0$; Then $i_L(t) = i_L(\infty)\,(1 - e^{-t/\tau})$
$V_C(0) \neq 0$; $V_C(\infty) \neq 0$; Then $V_C(t) = V_C(\infty)+[V_C(0) - V_C(\infty)]e^{-(1/RC)t}$	$i_L(0) \neq 0$; $i_L(\infty) \neq 0$; Then $i_L(t) = i_L(\infty) + [i_L(0) - i_L(\infty)]e^{-(R/L)t}$
$i_C(t) = C\frac{dV(t)}{dt}$	$V_L(t) = L\frac{di(t)}{dt}$